APPROVED FOR PUBLIC RELEASE

UNCLASSIFIED
6/4/79
12/9/80

SPECIAL RE-REVIEW
FINAL DETERMINATION
UNCLASSIFIED, DATE: 12/9/80

LOS ALAMOS NATIONAL LABORATORY
3 9338 00356 8754

APPROVED FOR PUBLIC RELEASE

[redacted]

UNCLASSIFIED

UNCLASSIFIED

VERIFIED UNCLASSIFIED
LMR 6-11-79
GMS 12-9-80

CIC-14 REPORT COLLECTION
REPRODUCTION
COPY

Classification changed to UNCLASSIFIED
by authority of the U. S. Atomic Energy Commission,
Per NDR TID-138 Suppl, 12-31-71
By REPORT LIBRARY, 7-27-72

PUBLICLY RELEASABLE
Per JFW, FSS-16 Date: 6-9-81
By, CIC-14 Date: 3-6-96

LA - 409

[redacted]

December 10, 1945

This document contains 158 pages

BUILDING D PLUTONIUM PURIFICATION:

VERIFIED UNCLASSIFIED [redacted]ENT DRAWINGS
Per LMR 6-11-79
By JJDeb 3-6-96

Classification changed to CONFIDENTIAL
by authority of the U. S. Atomic Energy Commission,
Per
By REPORT Library

COMPILED BY:

A.C. Briemeister

SCANNED NOV 12 1996
LOS ALAMOS NATL. LAB. LIBR.
3 9338 00356 8754

Classification changed to CONFIDENTIAL
by authority of the U. S. Atomic Energy Commission,
Per ACR (TID-138) 1-13-58
By REPORT LIBRARY

UNCLASSIFIED

[redacted]

[redacted]

UNCLASSIFIED

APPROVED FOR PUBLIC RELEASE

APPROVED FOR PUBLIC RELEASE

UNCLASSIFIED

[redacted]

ABSTRACT

Assembly and part drawings for all the equipment used in the purification of plutonium in Building D are compiled in this report.

[redacted]

UNCLASSIFIED

UNCLASSIFIED

APPROVED FOR PUBLIC RELEASE

APPROVED FOR PUBLIC RELEASE

DECLASSIFIED

UNCLASSIFIED

[redacted]

TABLE OF CONTENTS

	Pages
Index of Parts List	IV-XI
Metal Parts for "P" Apparatus	1-20
Glass Parts	21-49
Hood Parts	50-99
Cut Room Parts	100-138
Miscellaneous Drawings	139-146
Standard Industrial Equipment List	147

[redacted]

DECLASSIFIED

UNCLASSIFIED

APPROVED FOR PUBLIC RELEASE

APPROVED FOR PUBLIC RELEASE

UNCLASSIFIED

Index

Parts List - Assemblies

Name	Number	Page
Extractor Jacket Assembly	1100	1
Extractor Head Assembly	1200	2
Extractor Support Assembly	1300	2, 19
Boiler Jacket Assembly	1400	5
Boiler Head Assembly	1500	6
Boiler Support Assembly	1600	7
Extractor Glassware Assembly	2100	21 - 26
Boiler Glassware Assembly	2200	27 - 32
Superstructure Glassware	2300	33 - 39
Vapor Trap Assembly	2400	40 - 44
Condenser Assembly	2500	45 - 47
Storage and Transfer Bottles	2600	48 - 49
Hood, Hood Equipment	3400	50 - 76
Miscellaneous Equipment in Hood	3500 - 3700	77 - 99
Rough Cut Room Equipment	4100 - 4200	100 - 123
Fine Cut Room Equipment		124 - 125
Supernatant Cut Room Equipment	4300	126 - 128
Miscellaneous Equipment and Drawings		129 - 146

UNCLASSIFIED

APPROVED FOR PUBLIC RELEASE

APPROVED FOR PUBLIC RELEASE

UNCLASSIFIED

Index

Parts List - Sub-assemblies

Name	Number	Page
Extractor Jacket	1110	1
Extractor Wall and Window Details	1110	3
Extractor Pot Support	1110	4
Heating Coils and Baffles	1120	1
Heating Coil Baffle Details	1120	19
Circulating Tubes	1130	1
Circulating Inlet and Outlet Details	1130	4
Extractor Head Plate	1210	2
Extractor Shield	1210	4
Extractor Head Plate Details	1210	18
Glass Tube Bushing	1220	2
Glass Tube Bushing Details	1220	16
Stirrer Bearing	1230	2
Stirrer Bearing Shell Details	1230	14
Stirrer Base and Bushing Details	1230	17
Stirrer Bearing Assembly	1230	20
Stirrer Shaft	1240	15
Stirrer Shaft Parts Details	1240	15
SN Tube Clamp*	1250	2
SN Tube Clamp Details	1250	16
Rack and Pinion	1260	2
Rack and Pinion Parts Details and Assembly		12
Remote Control	1270	11
Remote Control Apparatus Details	1270	11
SN Tube Support	1280	2
SN Tube Support Details	1280	13
Support Rods	1310	2
Extractor Base Plate and Support Rods	1310	18

UNCLASSIFIED

* SNAP Reactor Not Implemented

APPROVED FOR PUBLIC RELEASE

APPROVED FOR PUBLIC RELEASE

UNCLASSIFIED

Index

Parts List - Sub-assemblies

Name	Number	Page
Boiler Jacket	1410	5
Boiler Jacket Details	1410	9
Boiler Window Assembly and Details	1410	[illegible]
Boiler Pot Support	1410	[illegible]
Bayonet Ring and Gasket Flange Details		8
Heating Coils	1420	5
Heating Coils Baffle Details	1420	19
Circulating Tubes	1430	5
Circulation Inlet and Outlet Details	1430	4
Boiler Head Plate	1510	6
Boiler Shield	1510	4
Boiler Head Plate Details	1510	18
Glass Tube Bushing	1520	6
Glass Tube Bushing Details	1520	16
Stirrer Bearing	1530	6
Stirrer Bearing Shell Details	1530	14
Stirrer Base and Bushing Details	1530	17
Stirrer Bearing Assembly	1530	20
Stirrer Shaft	1540	15
Stirrer Shaft Parts Details	1540	15
SN Tube Clamp	1550	6
SN Tube Clamp Details	1550	16
Rack and Pinion	1560	6
Rack and Pinion Part Details and Assembly		12
Vapor Tube Bushing	1570	6
Vapor Tube Bushing Details	1570	17
SN Tube Support	1580	6

UNCLASSIFIED

APPROVED FOR PUBLIC RELEASE

APPROVED FOR PUBLIC RELEASE

UNCLASSIFIED

Index

Sub-assemblies, Glass Parts

Name	Number	page
SN Tube Support Details	1580	13
Extracter Head Lugs		19
Support Rods	1610	5
Support Rod Details	1610	7
Bayonet Plate Details	1610	8
Extractor Pot	2111	21
Extractor SN Tube	2121	22
Liquid Introducer Tube	2141	23
Wash Ring	2150	24
Thermocouple Tube	2161	25
Stirrer	2170	26
Boiler Pot	2210	27
Boiler SN Tube	2220	28
Liquid Introducer Tube	2240	29
Transfer Head and Bottom	2250	30
Boiler Thermocouple Tube	2261	31
Stirrer	2270	32
Reagent Reservoir	2311	33
Reagent Reservoir Cap	2320	34
Nitric Acid Reservoir	2331	35
Ether Reservoir	2341	36
Saran Adapters	2350-A,B,C,D,	37
Condenser Return	2360	38
Safety Vapor Tube	2370	39
Sodium Hydroxide Trap	2410	40
Spray Trap	2420	41

UNCLASSIFIED

APPROVED FOR PUBLIC RELEASE

APPROVED FOR PUBLIC RELEASE

UNCLASSIFIED

Index

Glass Parts - Misc. Parts

Name	Number	Page
Kjeldahl Trap	2430	42
Bubbler	2442	
Wolff Bottle, 500 ml.	2460	Br[illegible] Corp. Catalogue 40 Part [illegible]. 16754
Liquid Drip Catcher	2470	44
Condenser	2510	45
Cold Fingers	2520	45
Liquid Vapor Tee	2531	46
Ether Vapor Tube	2540	47
Storage Bottle	2610	48
Transfer Bottle	2630	49
Hood Assembly		50
Hood Rear Details		51
Elevation of Service Panels and Piping		52
Outside Piping Details		53
Details of Bottom Pan		54
Nitric Bottle Holder	3410	55
Ether Bottle Holder	3420	56
Transfer Can	3430-A	57, 58, 59
Transfer Can Holder	3430-B	60
Transfer Can Holder Clamp	3430-C	61
Semiball Joint Clamp, 102/75	3440-A	62
Special Semiball Joint Clamp, 102/75	3440-B	63, 64
Semiball Joint Clamp, 65/40	3440-C	65, 66, 67
Condenser Stand Assembly	3450	68
Condenser Clamp	3450-A	69
Condenser Clamp Bracket	3450-B	70
Ceiling Clamp for Condenser Stand	3450-C	71
Storage Can	3460	72

UNCLASSIFIED

APPROVED FOR PUBLIC RELEASE

APPROVED FOR PUBLIC RELEASE

UNCLASSIFIED

Index

Hood Parts

Name	Number	Page
Hood Top	3470	73
Hood Trap Door	3470-A	74
Support Brace	3480	75
Glycol Solution Storage Tank	3490	76
Pump Tray	3510	77
Vapor Tube Seal	3520	[illegible]
Condenser	3521	[illegible]
Can for SN Bottles	3540	79
Stopcock Clamp	3560	80
Window Straps	3590	81
Bubbler Shield	3620	82
Bottle Shelf	3630	83
Adapter for Flexible Cable	3640	84
Air Motor Support	3730	85
Handle for 3-way Valve	3650	86
Fire Extinguisher Handle	3660	87
Reagent Reservoir Holder, bottom	3710	88, 89, 90, 91
Reagent Reservoir Holder, top	3710	92, 93, 94, 95
Cubicle Layout		96
Equipment Placement in Hood		97
Equipment Placement, Hood Top		98
Photograph of Equipment in Hood		99

UNCLASSIFIED

APPROVED FOR PUBLIC RELEASE

APPROVED FOR PUBLIC RELEASE

UNCLASSIFIED

Index

Cut Room Parts

Name	Number	Page
Kewanee Drawing, Rough Cut Hood		100
Bomb Holder Assembly	4100	101
Bottle Holder and Adjusting Screw	4110-D	102
Bomb Holder Base Plate	4110-A	103
Bomb Holder Details	4110-B	104
Splash Cap For Bomb	4110-C	105
Stirrer Support	4120	106
Transfer Tube Support	4120-A	107
Sleeve Detail	4120-B	108
Wall Support	4130	109
Storage Bottle Holder	4140	110
Splash Cap for Storage Bottle	4140-A	111
Transfer Apparatus	4150	112
Dripcatchers	4160	113
Splash Cap for Et Bottle	4170	114
Bomb Holder Support	4180	115
Tray Support	4190	116
Tray	4190-A	117
Nitric Acid Bottle Holder	4210	118
Wall Rack	4220	119
Bomb Drier Insert	4230	120
Bomb Holder	4240	121
Placement Of Equipment, RC Hood		122
Photograph of RC Hood		123
Kewanee Drawing, Fine Cut Hood		124
Photograph of Fine Cut Hood		125
Shelf for FN Cut Room	4310	126

UNCLASSIFIED

APPROVED FOR PUBLIC RELEASE

APPROVED FOR PUBLIC RELEASE

FILED
REPORT

UNCLASSIFIED

Index

Cut Room Parts

Name	Number	Page
Shelf for SN Cut Room	4310	127
Assembly of Motor Mount	4320	128
Brass Bushings for Motor Mount	4320-A	129
Steel Adapters for Motor Mount	4320-B	130
Parts for Motor Mount	4320-C	131
Support for Air Motor	4330	132
Adapter, Motor to Stirrer	4340	133
S N Stirrer	4350	134
SN Cut Pipette	4360	135
Pipette Holder	4370	136
SN Drip Catchers	4380	137
Photograph, SN Cut Room		138
Room Layout, D-152		139
Can Storage Cabinet		140
Mine Safety Apparatus Alarm		141
Mine Safety Apparatus, diagram		142
Dolly Handle		143
Frame for SN Cart		144R
Refrigeration Unit, Assembly		145
Refrigeration Unit, Control Diagram		146
Data Sheet on Standard Industrial Equipment Purchased		147

UNCLASSIFIED

APPROVED FOR PUBLIC RELEASE

APPROVED FOR PUBLIC RELEASE
APPROVED FOR PUBLIC RELEASE
APPROVED FOR PUBLIC RELEASE

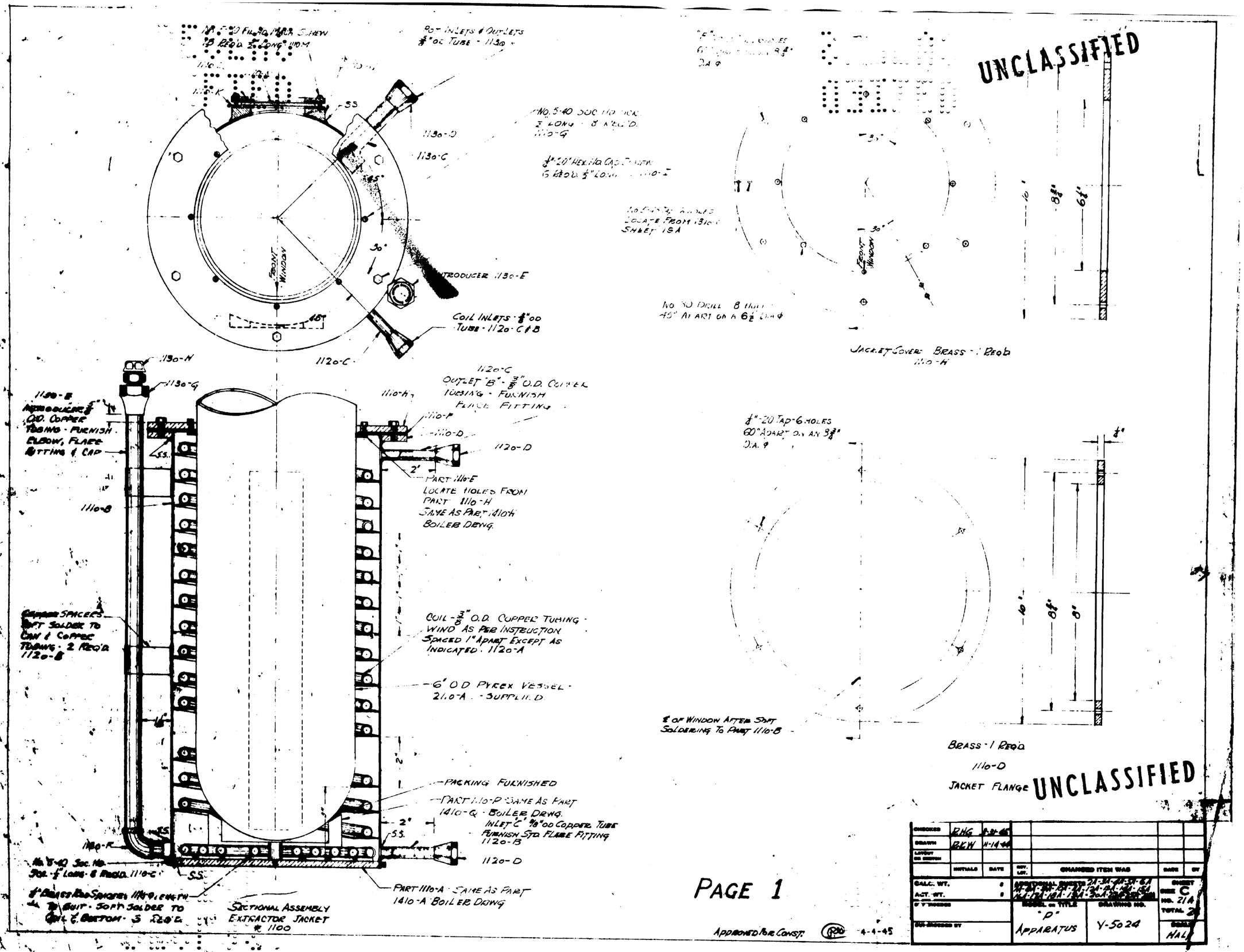

APPROVED FOR PUBLIC RELEASE
APPROVED FOR PUBLIC RELEASE
APPROVED FOR PUBLIC RELEASE

APPROVED FOR PUBLIC RELEASE

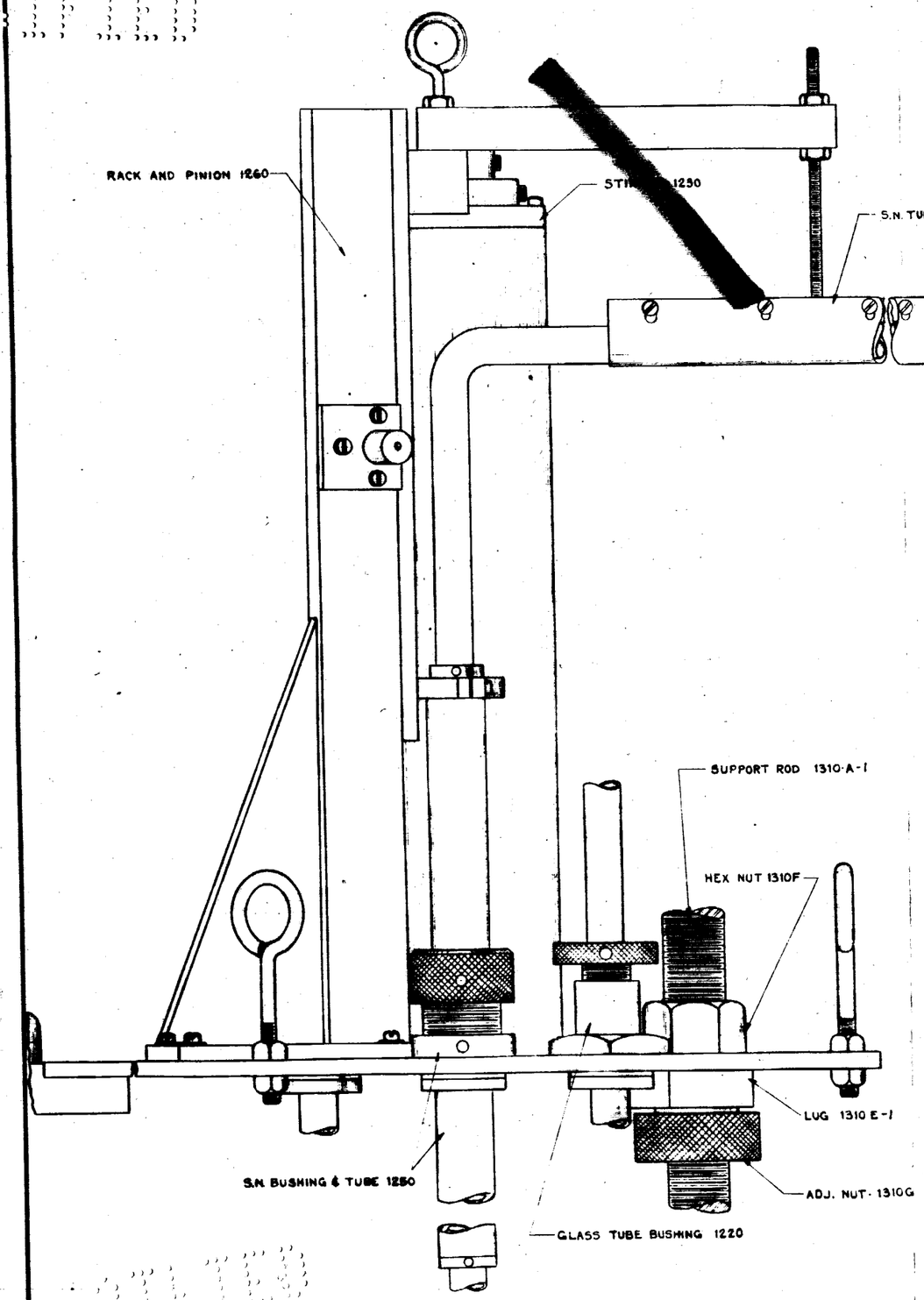

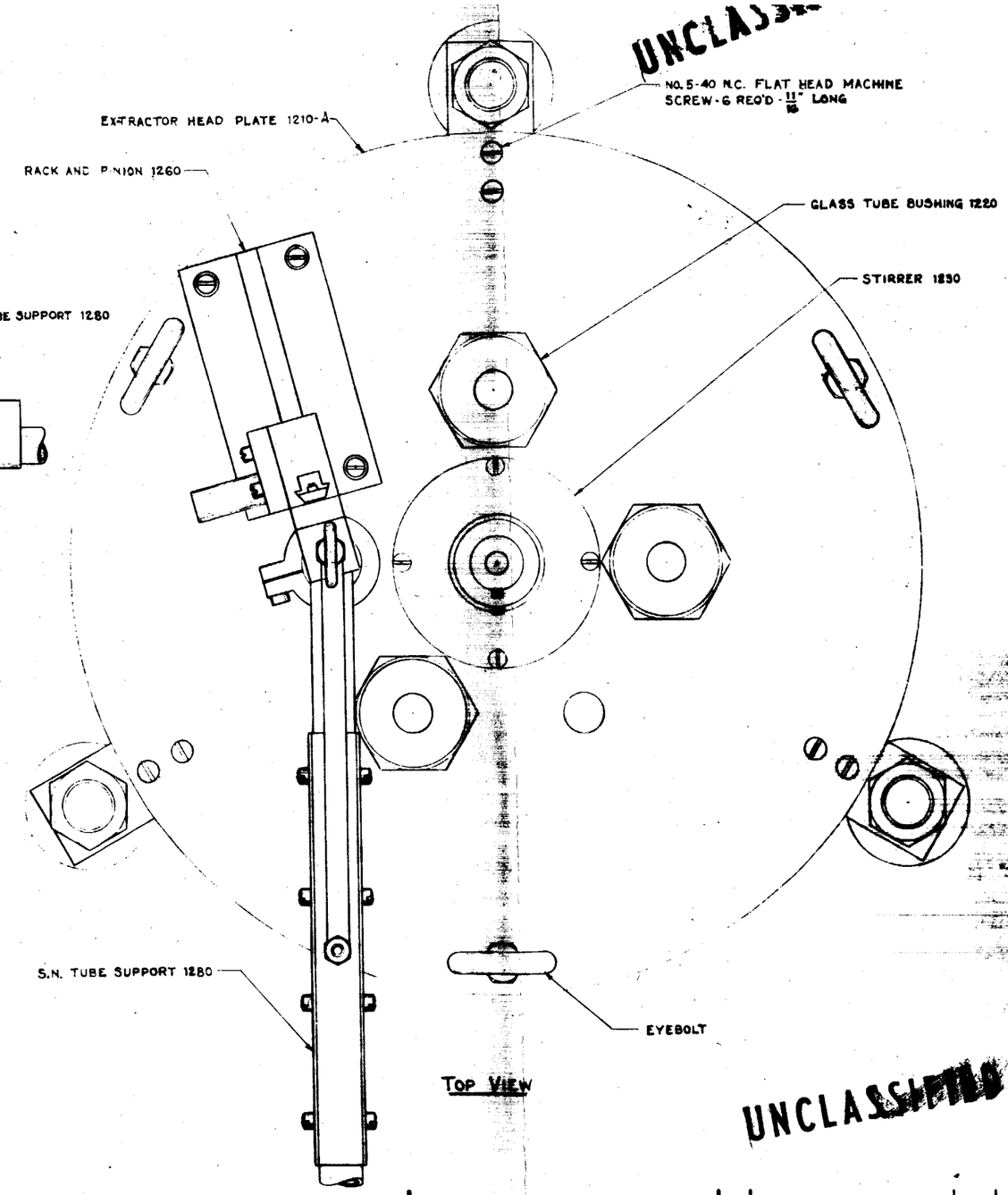

PAGE 2

EXTRACTOR HD. ASSEMBLY
1200

		APPROVED FOR GEN.	(RRJ)	4-4-45			
		CHIEF ENG.					
		PROJ. ENG.					
		CHECKED	RHG	3-31-45			
		DRAWN	CMT	3-31-45			
GROUP REPR.	GROUP NO.	LAYOUT ON DRAWN					
			INITIALS	DATE	REV. LTR.	CHANGED ITEM WAS	DATE / BY

FINISH GROUND
SMOOTH MACHINE
ROUGH MACHINE
TOLERANCE EXCEPT AS NOTED
FRACTIONAL ± 1/64
ANGLES ± 1/2°
SHEET METAL ± 1/32
DECIMALS NOTED

CALC. WT. #
ACT. WT. #

ADDITIONAL SHEETS 1B-3B-4A-5B-6B-7B 8A-9B-10B-11A-11B-13A-14B-15A-15B-16B 19B-19B-20A

SUPERSEDES

SUPERSEDED BY

MODEL or TITLE: "P" APPARATUS

DRAWING NO. Y-5024

SIZE C

SHEET NO. 2A TOTAL 20

SCALE FULL

APPROVED FOR PUBLIC RELEASE

APPROVED FOR PUBLIC RELEASE

UNCLASSIFIED

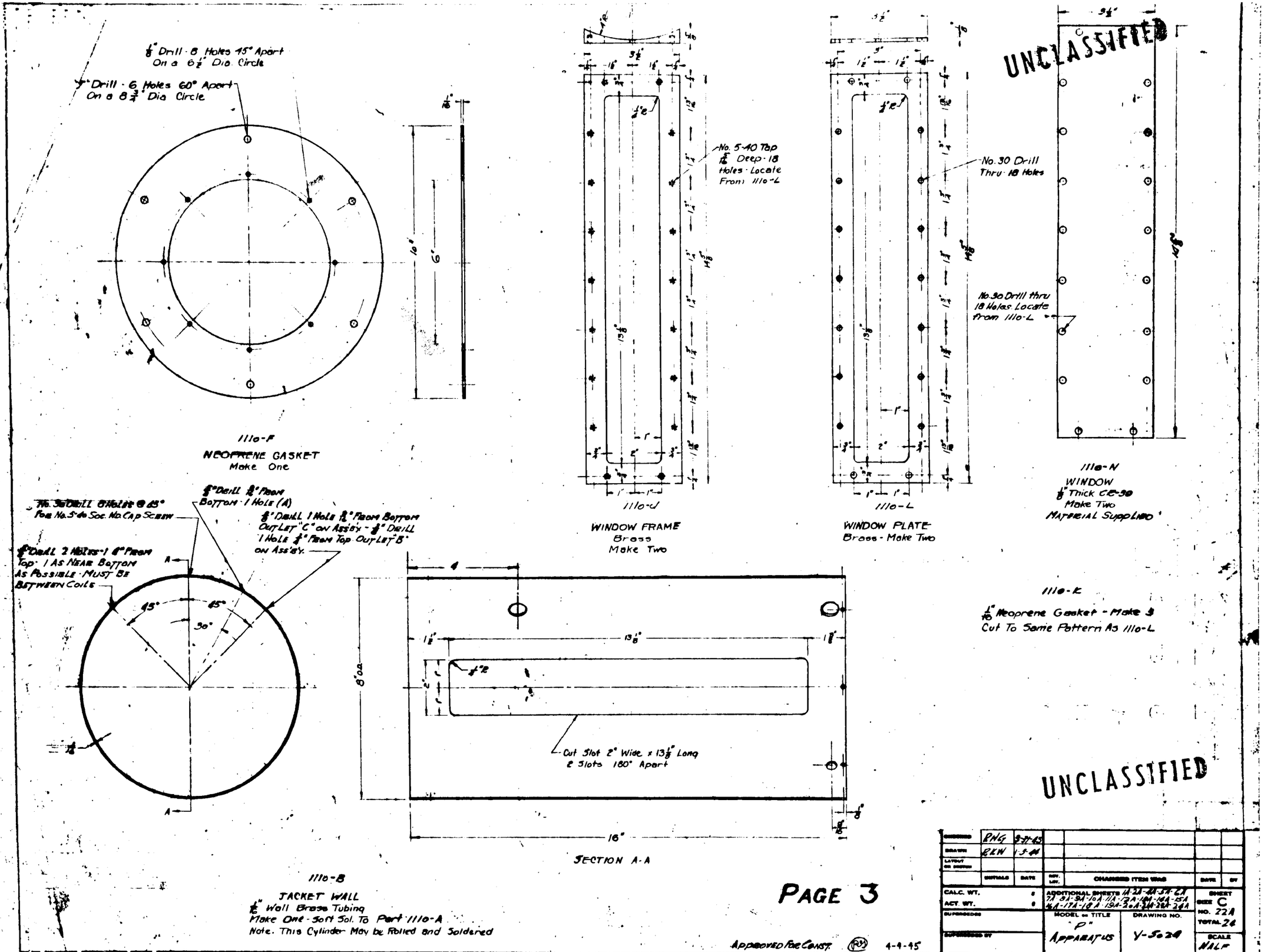

UNCLASSIFIED

APPROVED FOR PUBLIC RELEASE

APPROVED FOR PUBLIC RELEASE

UNCLASSIFIED

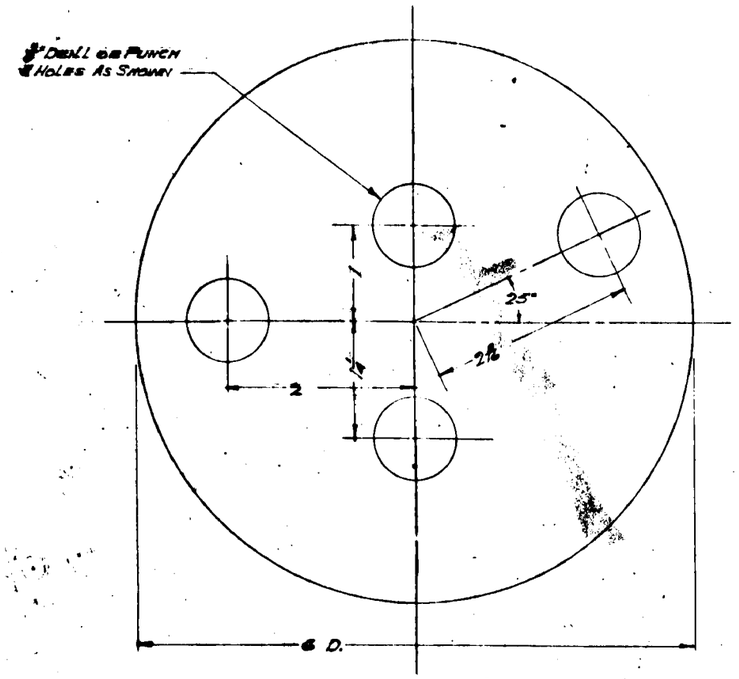

1510-B
BOILER SHIELD - 1 REQ'D.
10 MIL TANTALUM SHEET
1" = 1"
MATERIAL SUPPLIED

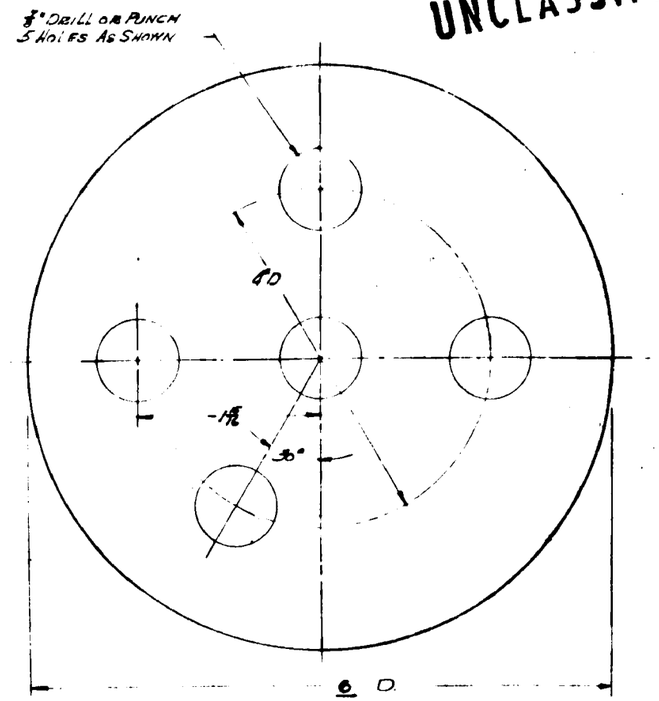

1216-B
EXTRACTOR SHIELD - 1 REQ'D.
10 MIL TANTALUM SHEET
1" = 1"
MATERIAL SUPPLIED

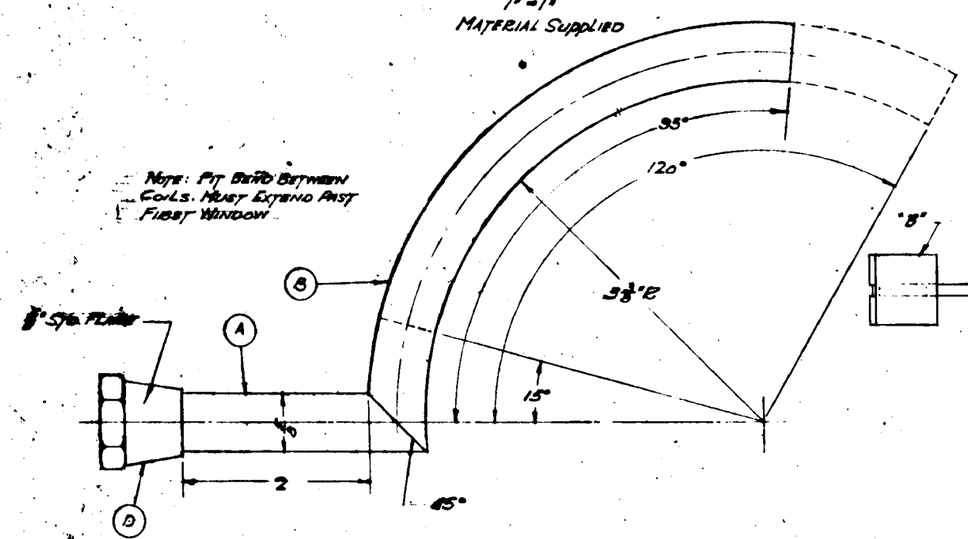

CIRCULATING INLETS & OUTLETS
3/8" O.D. COPPER TUBING
BEND 1 AT 120° PART 1430-B
" " " 95° " 1180-B
" 2 " 15° " 1130-C & 1430-C
1" = 1"

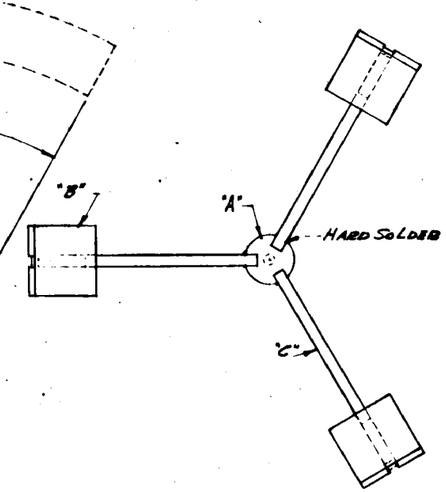

POT SUPPORT
MAKE 2 - PARTS
1410-Q1 & 1110-P1

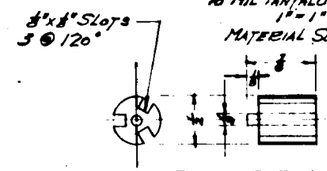

BRASS - 2 REQ'D
"A" - 1

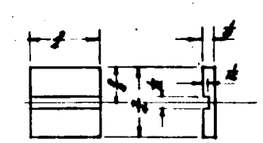

BRASS - 6 REQ'D.
"B"
HARD SOLDER TO "C"

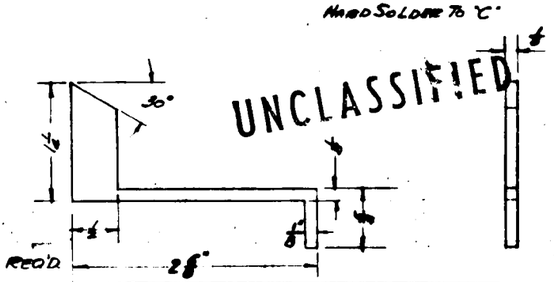

BRASS - 6 REQ'D.
"C"

UNCLASSIFIED

PAGE 4

APPROVED FOR CONST. 4-4-45

DESIGNED	R.H.G.	9-31-45			
DRAWN	R.E.W.	1-2-45			
LAYOUT OR SKETCH					
	INITIALS	DATE	REV. LTR.	CHANGED ITEM WAS	DATE / BY
CALC. WT.	#		ADDITIONAL SHEETS	18-28-38-58-68 / 78-88-98-108-11A-12A-13A-14A / 15A-16A-17A-18A-19A-20A	SHEET
ACT. WT.	#				SIZE C
SUPERSEDES			MODEL OR TITLE "P" APPARATUS	DRAWING NO. Y-5024	NO. 6A
SUPERSEDED BY					TOTAL 20
					SCALE FULL

APPROVED FOR PUBLIC RELEASE

APPROVED FOR PUBLIC RELEASE

UNCLASSIFIED

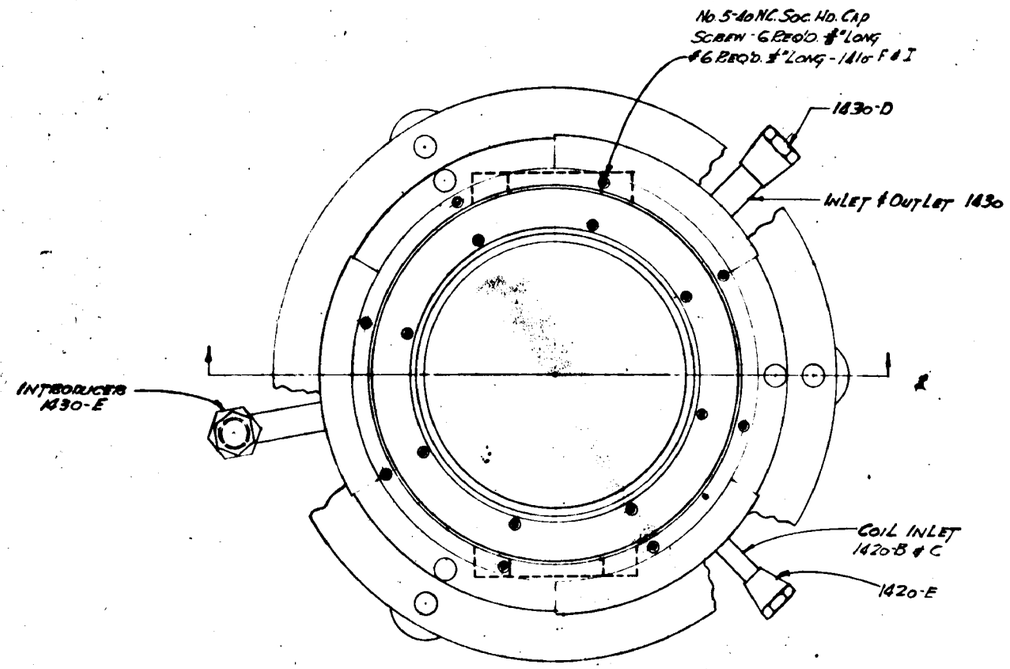

PLAN

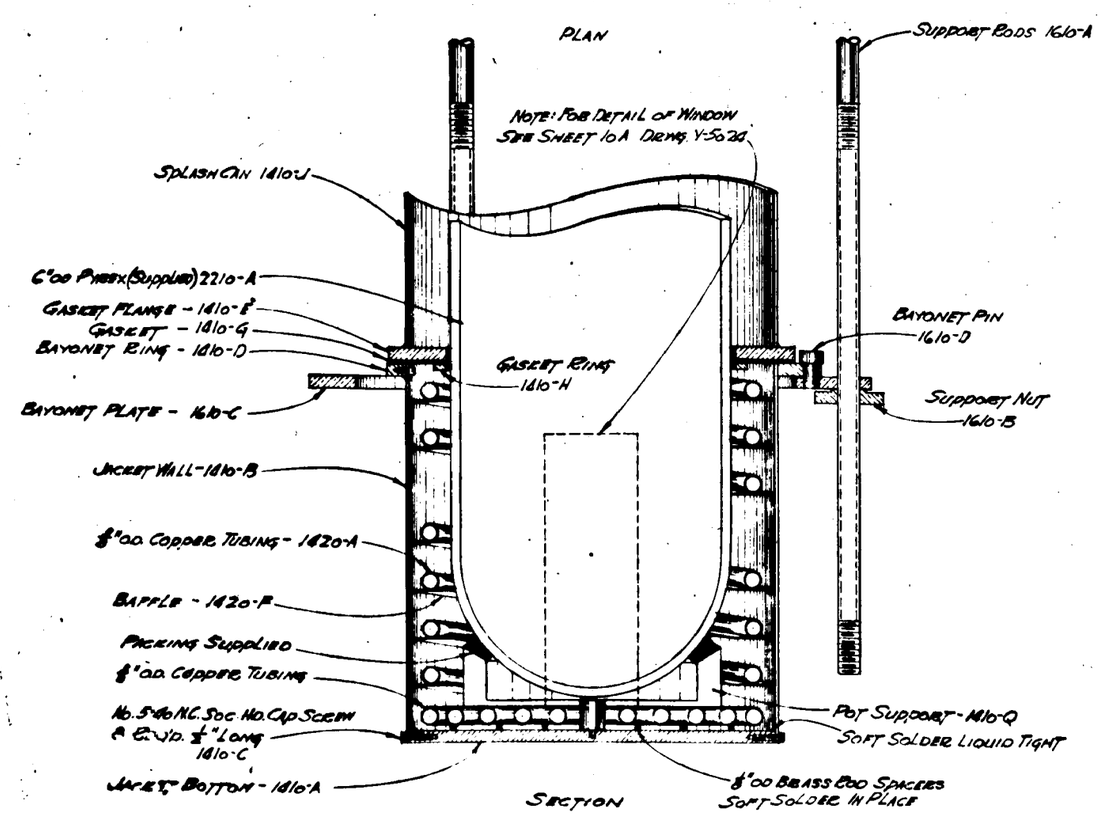

SECTION

PAGE 5

UNCLASSIFIED

		Approved Tech. Direct.	(Pob)	4-4-45	
		Chief Eng.			
		Proj. Eng.			
		Checked	EHG	4-2-45	
W.L.	CM-5	Drawn	RTH	4-2-45	
Group Repr.	Group No.	Layout on Design			
			Initials	Date	

Finishes: Ground; Smooth Machine; Rough Machine

Tolerances Except as Noted: Fractional ±1/64; Angles ±1/4°; Sheet Metal ±1/32; Decimals Noted

Rev. Ltr.	Changed Item Was	Date	By

Calc. Wt. #; Act. Wt. #

Supersedes

Superseded by

Additional Sheets: 11-2A-3A-4A-6A, 7A-8A-9A-10A-11A-12A-13A-14A-15A, 16A-17A-18A-19A-20A-21A-22A-24A

Model or Title: "P" Apparatus

Drawing No. Y-5026

Sheet Size C; No. 23A; Total 24

Scale Half

APPROVED FOR PUBLIC RELEASE

APPROVED FOR PUBLIC RELEASE

UNCLASSIFIED

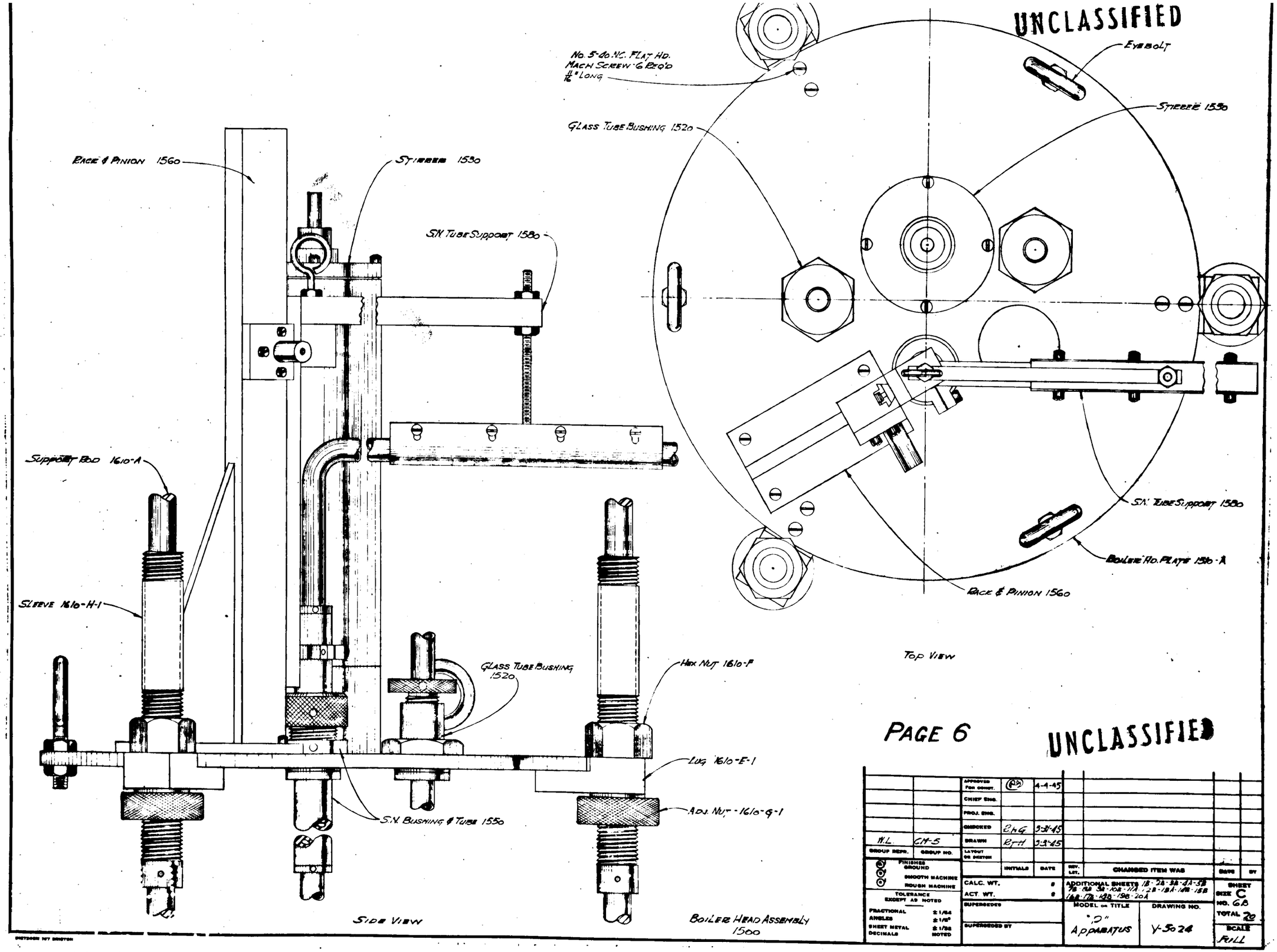

APPROVED FOR PUBLIC RELEASE

APPROVED FOR PUBLIC RELEASE

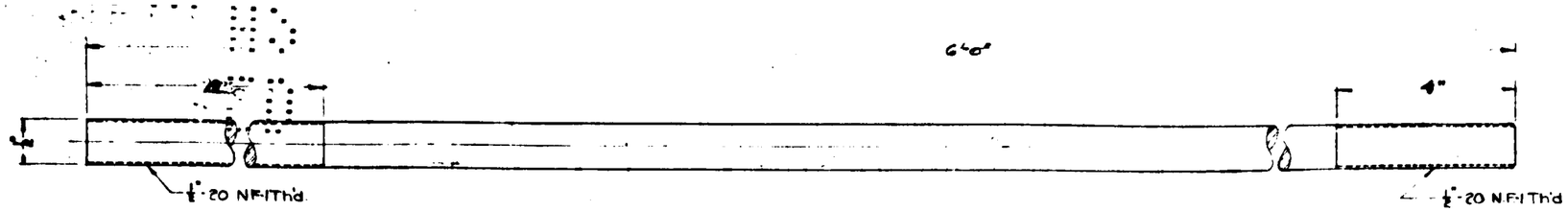

1610-J
Note: Supply 6 Washers
1 1/8" O.D. x 5/8" I.D.
(Nominal Size 1/2)

1610-I-1
Note: Supply 6 Hex. Nuts-
Steel 1/2"-20 NF-1

UNCLASSIFIED

PART 1610A-SUPPORT RODS - 1/2" BESSEMERIZED STEEL
MAKE THREE

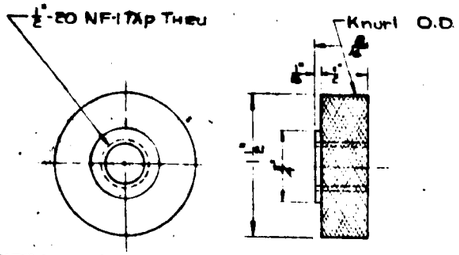

PART 1610-E-1 BRASS
MAKE THREE
SUPPORT NUT

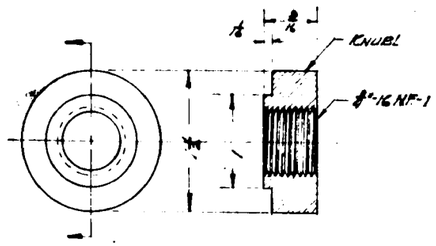

HEAD PLATE ADJUSTMENT NUT
BRASS - 6 REQ'D. 1610-G-1 & 1310-E-1
PROVIDE 6 HEX NUTS 1310-F

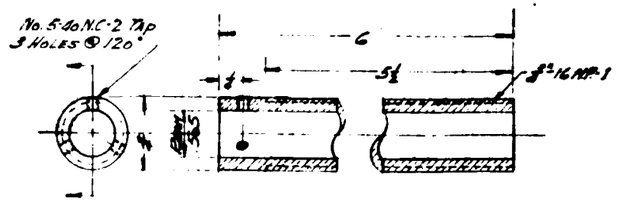

HEAD PLATE ADJUSTMENT SLEEVE
BRASS TUBE - 3 REQ'D.
LOOSE FIT ON PART 1610-A
1610-N-1

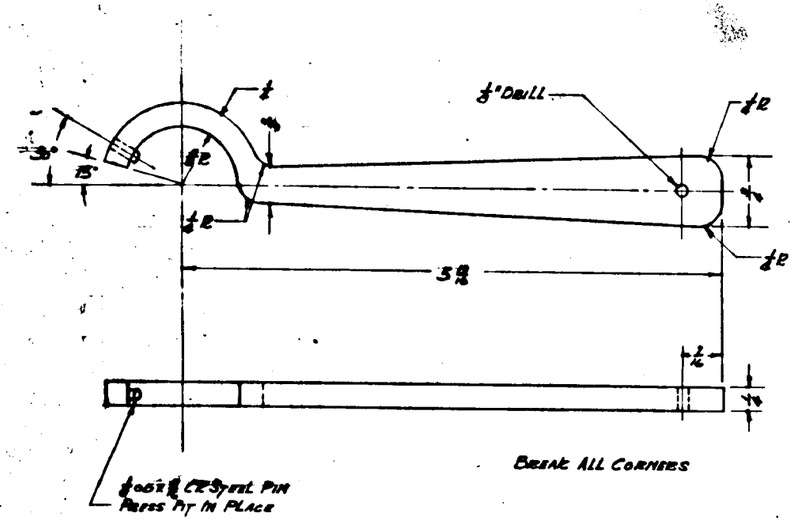

C.R. STEEL - 1 REQ'D.
PART 3700

PAGE 7

UNCLASSIFIED

DESIGNED	RHG	3-31-45				
DRAWN	RCW	12-22-44				
LAYOUT OR SKETCH						
	INITIALS	DATE	REV. LTR.	CHANGED ITEM WAS	DATE	BY
CALC. WT.	#		ADDITIONAL SHEETS	1B-2B-3B-4A-5B C.R. 8B-9A-10A 11A-12B-13A-14B 15A-16B-17B-18B-19B-20A		
ACT. WT.	#					
SUPERSEDES			MODEL — TITLE "P" APPARATUS	DRAWING NO. Y-5024	SHEET SIZE C NO. 7B TOTAL 20	
SUPERSEDED BY					SCALE FULL	

APPROVED FOR CONST. 4-4-45

APPROVED FOR PUBLIC RELEASE

APPROVED FOR PUBLIC RELEASE

UNCLASSIFIED

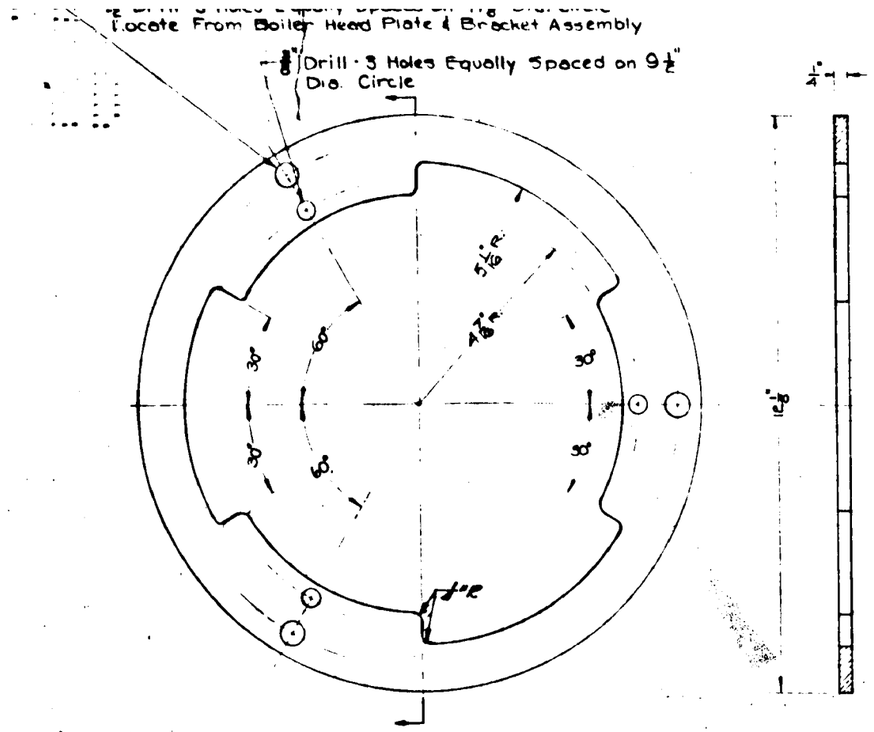

PART 1410-A BRASS - MAKE ONE - BAYONET PLATE

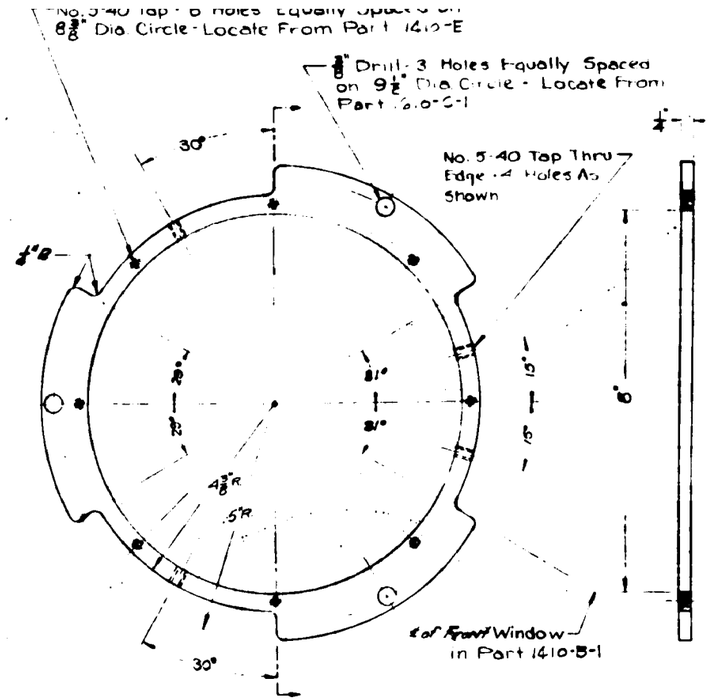

PART 1410-D BAYONET RING - BRASS - MAKE ONE
Soft Solder To Part 1410-B-1

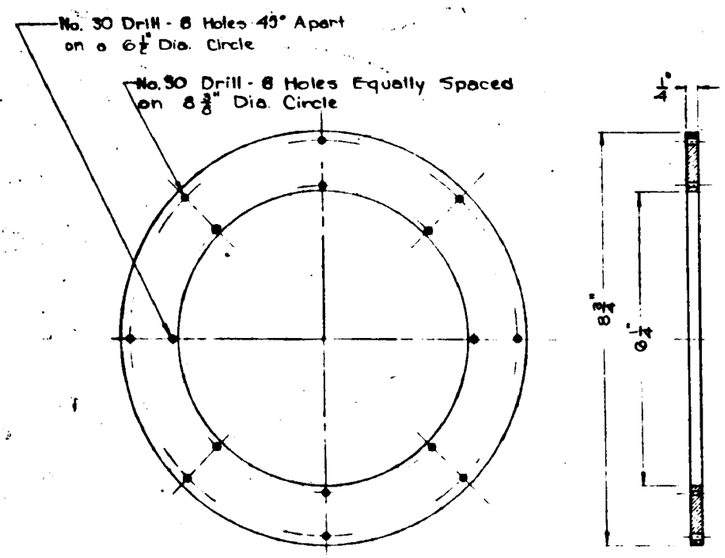

PART 1410-E GASKET FLANGE - BRASS - MAKE ONE
Soft Solder To Part 1410-J

1410-G - NEOPRENE GASKET CUT TO PATTERN OF PART 1410-E EXCEPT I.D. TO BE 6"

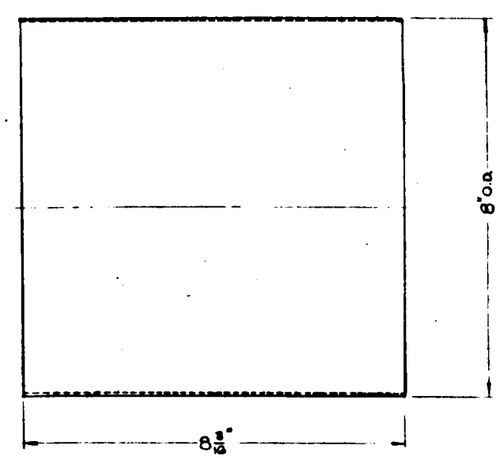

PART 1410-J SPLASH CAN - MAKE ONE
Note: This Part Can Be Rolled and Silver-Soldered From 1/16" Brass Sheet

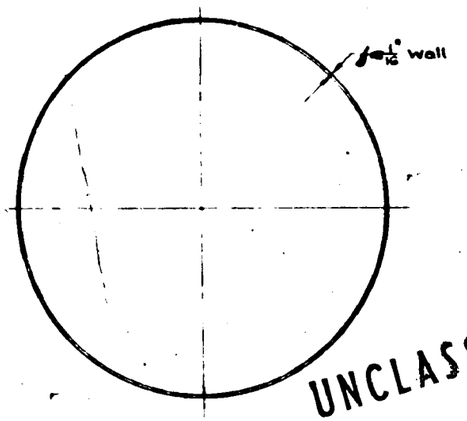

UNCLASSIFIED

ENGINEER	EHG	3-31-45			
DRAWN	EEW	7-22-48			
LAYOUT OR VARIFIER					
	INITIALS	DATE	REV. NOT.	CHANGED ITEM WAS	DATE / BY
CALC. WT.			ADDITIONAL SHEETS 1A-2A-3A-4A-5A 2B-7B-9B-10B-11A-12B-14A-14B 15B-16B-17B-18A-18B-20A		SHEET SIZE C NO. 8B TOTAL 20
ACT. WT.			MODEL OR TITLE "P" APPARATUS	DRAWING NO. Y-5028	SCALE HALF
SUPERVISOR					
SUPERVISED BY					

PAGE 8

APPROVED FOR CONST. 4-4-45

APPROVED FOR PUBLIC RELEASE

APPROVED FOR PUBLIC RELEASE

UNCLASSIFIED

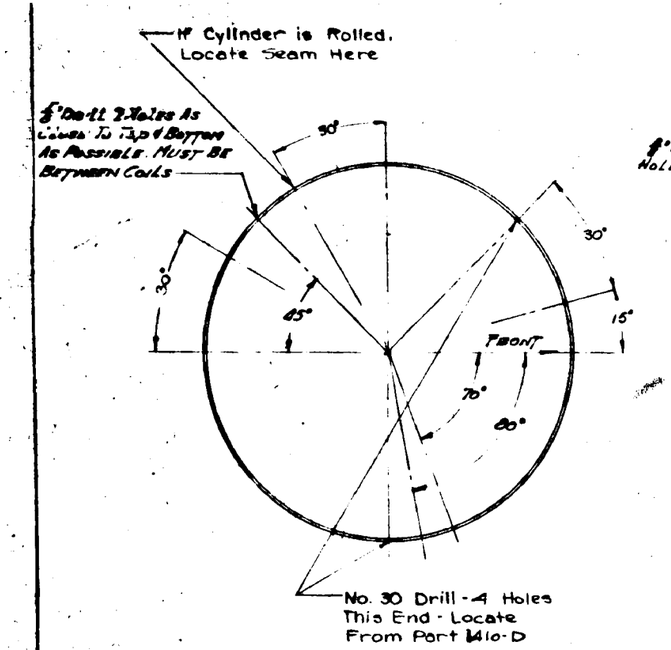

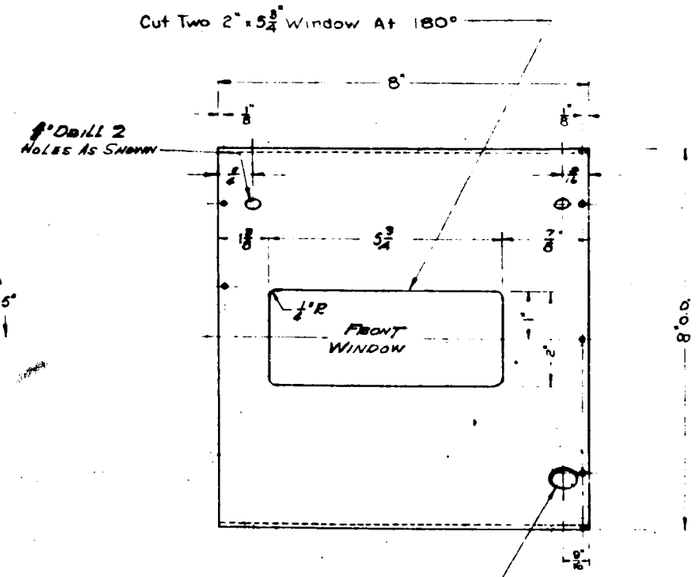

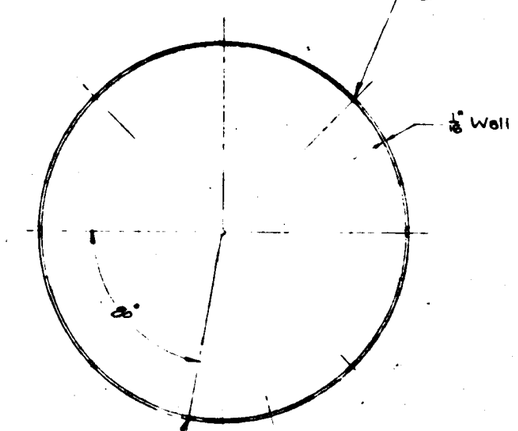

JACKET WALL - PART 1408 - BRASS TUBING - MAKE ONE Note: This Part Can Be Rolled and Silver Soldered From 1/16" Brass Sheet - SCALE - HALF SIZE

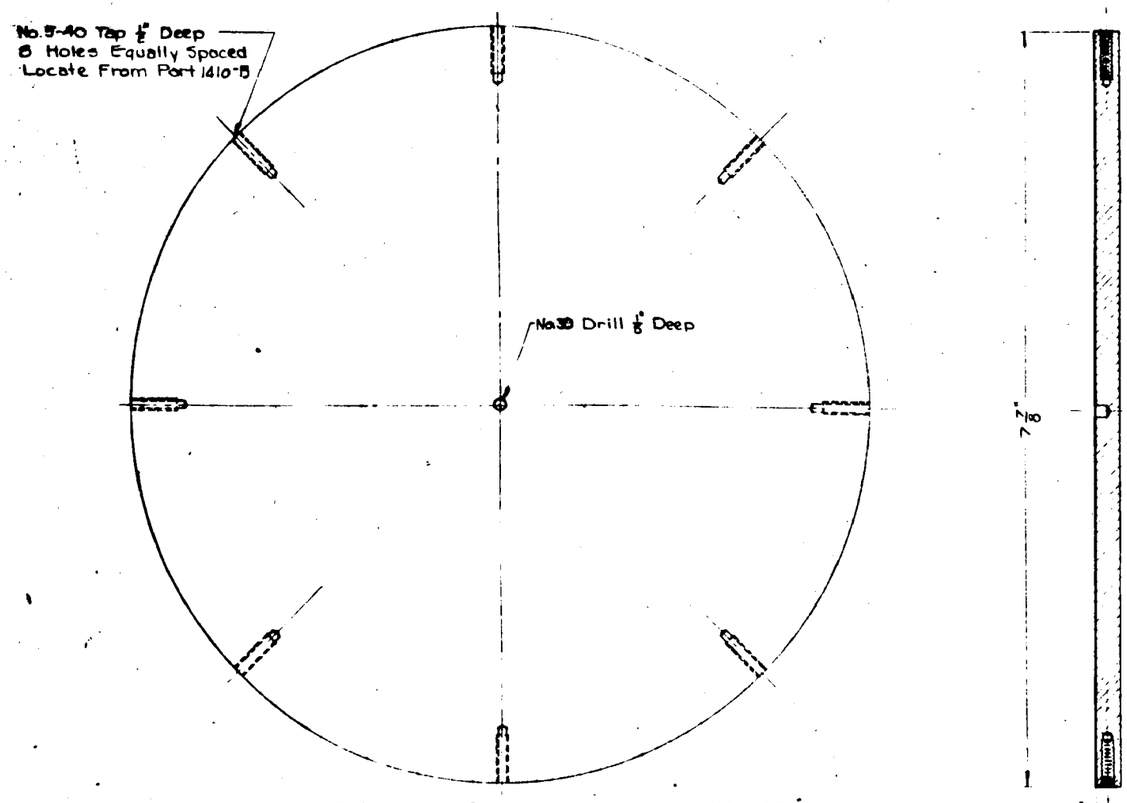

PART 1410-A BRASS - MAKE TWO - JACKET BOTTOM
Snug fit in Part 1410-B
SCALE - FULL SIZE

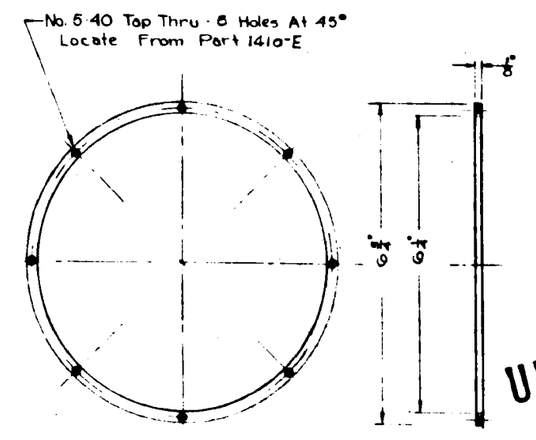

GASKET RING
PART 1410-H BRASS - MAKE TWO
SCALE - HALF SIZE

Note: Parts 1410-A & 1410-H Same For Extractor 1100

Approved For Const. 4-4-45

UNCLASSIFIED

PAGE 9

DESIGNED	RHG	5-31-45				
DRAWN	RLH	7-28-44				
LAYOUT ON DRAFTING						
	INITIALS	DATE	DIV. LTR.	CHANGED ITEM WAS	DATE	BY
CALC. WT.	#		ADDITIONAL SHEETS: 14-24-34-44-54 64-74-84-104-114-124-134-144-154 164-174-184-194-204-214-224-234		SHEET SIZE C NO. 24A TOTAL 26	
ACT WT.	#					
SUPERSEDES			MODEL or TITLE "P" APPARATUS	DRAWING NO. Y-5024	SCALE As Noted	
SUPERSEDED BY						

APPROVED FOR PUBLIC RELEASE

APPROVED FOR PUBLIC RELEASE

UNCLASSIFIED

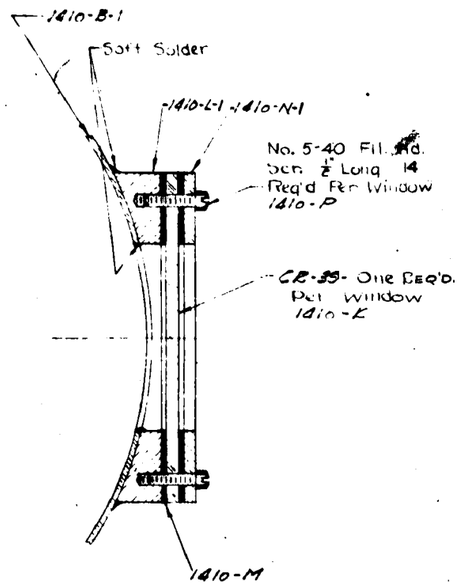

WINDOW ASSEMBLY
Top Sectional View - Make Two

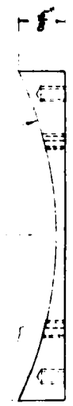

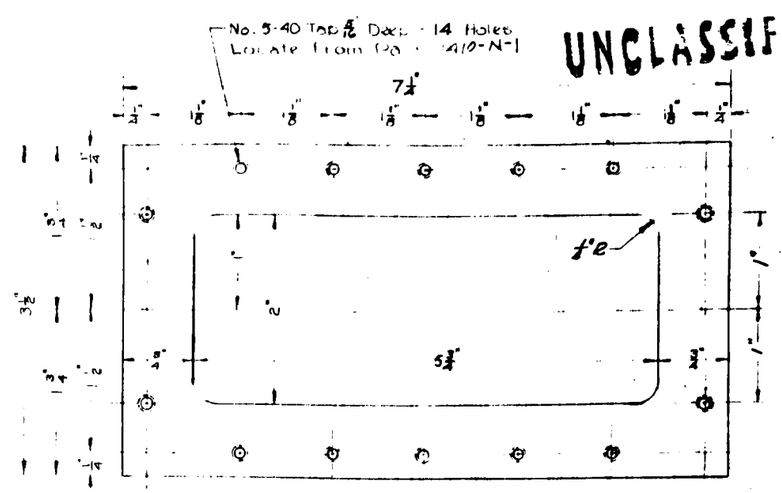

PART 1410-L-1 BRASS - MAKE TWO
WINDOW FRAME

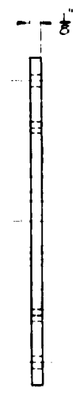

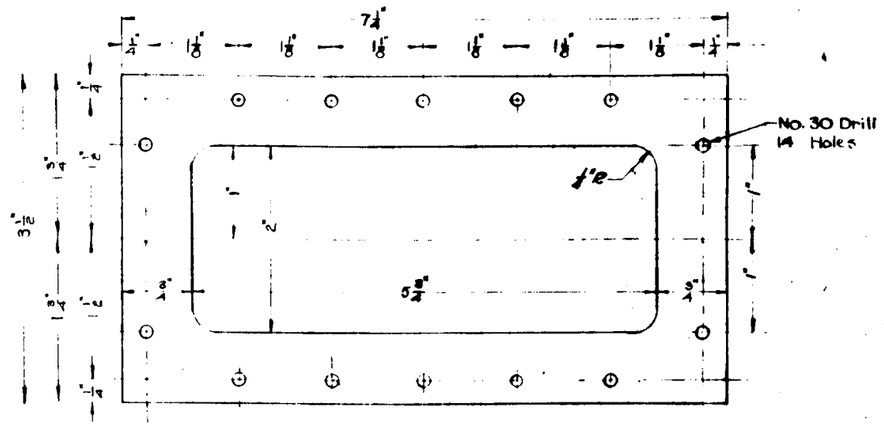

PART 1410-N-1 - BRASS - MAKE TWO
WINDOW PLATE

NOTE: MAKE 3 NEOPRENE GASKETS OF 1/16" SHEET TO THE SAME PATTERN AS PART 1410-N-1 PART No. 1410-M

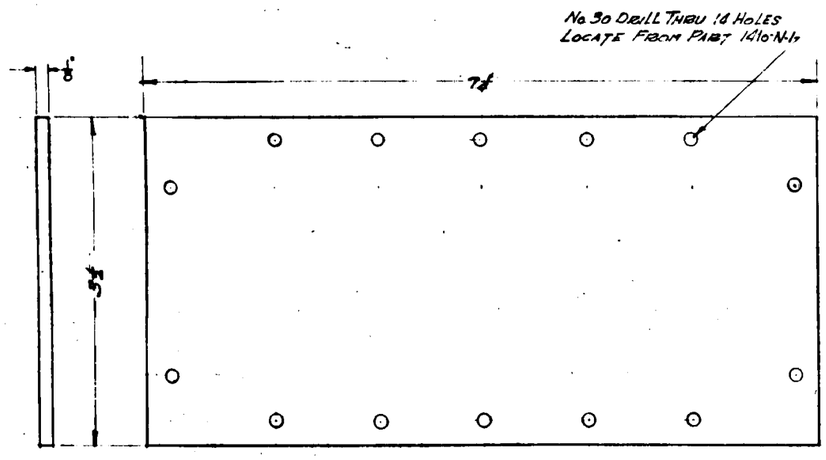

CB-39 WINDOW - TWO REQ'D
PART 1410-K
MATERIAL SUPPLIED

PAGE 10

UNCLASSIFIED

DESIGNED	E.L.G.	3-8-45			
DRAWN	E.L.H.	12-7-45			
LAYOUT SUB DIVISION					
	INITIALS	DATE	REV. LTR.	CHANGED ITEM TAG	DATE / BY
CALC. WT.	#		ADDITIONAL SHEETS 1B-2B-3B-4A-5B 2A-7B-8B-9B-11A-12B-13A-14B 15B-16B-17B-18B-19B-20A		SHEET SIZE C NO. 10-B TOTAL 20
ACT. WT.	#				
SUPERSEDES			MODEL or TITLE "D" APPARATUS	DRAWING NO. Y-5624	SCALE FULL
SUPERSEDED BY					

APPROVED FOR CONST. 4-4-45

APPROVED FOR PUBLIC RELEASE

APPROVED FOR PUBLIC RELEASE

UNCLASSIFIED

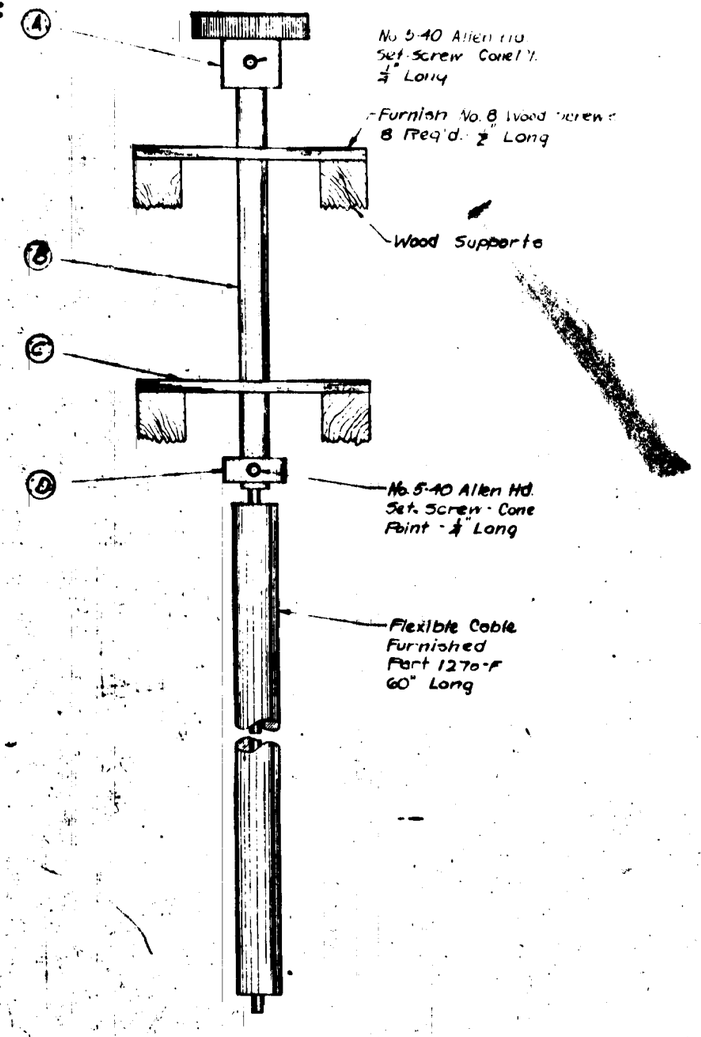

ASSEMBLY VIEW
REMOTE CONTROL
PART -1270
MAKE 5

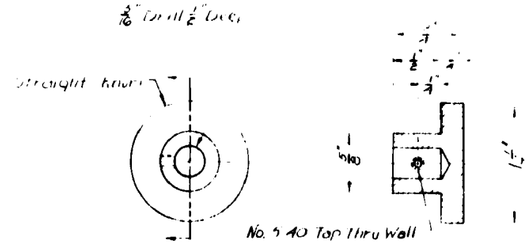

KNOB
Brass - Make 5
PART 1270-A

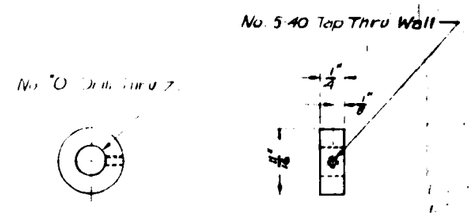

COLLAR
Brass - Make 5
PART 1270-D

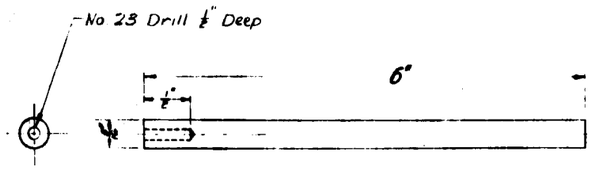

PART 1270-B
KNOB ROD
3/16" Brass Stock
Make 5

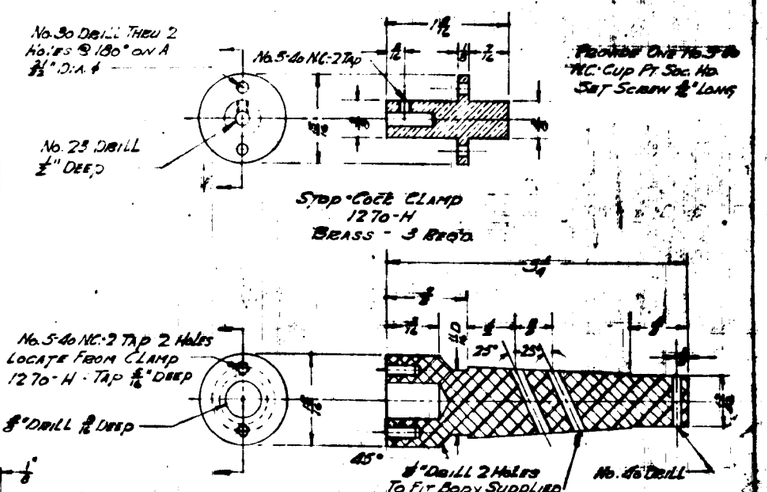

Provide 2 No. 5-40 NC. Fill. Hd. Mach. Screws 3/8" Long & Assemble 1270-H into 1270-G

Note: Taper To Fit 1270-L & 1270-K. This Part To Be Substituted For Glass Stop-Cock Plug In 1270-L & 1270-K

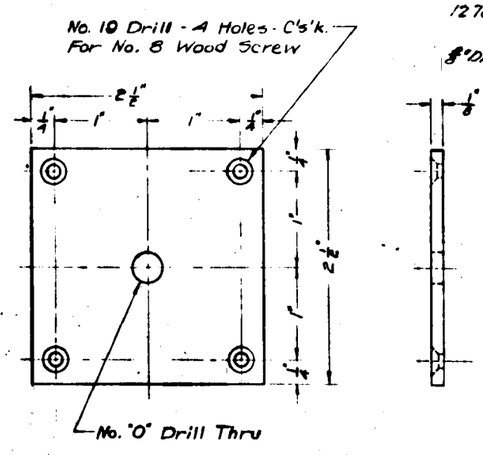

PART 1270-C
BEARING PLATE
Brass - Make 10

UNCLASSIFIED

Note: Part 1270-J Same As 1270-G Except 1270-J Has Only One 3/8" Hole Drilled To Coincide With The One Hole In The Glass Stop-Cock Body - Part 1270-K
1270-J 1 Req'd.

APPROVED FOR CONST. 4-9-45

DESIGN	EMG	3-31-45			
DRAWN	DLW	4-4-45			
LAYOUT OR SKETCH					
	INITIALS	DATE	REV. LTR.	CHANGED ITEM WAS	DATE / BY
CALC. WT.	#	ADDITIONAL SHEETS 1B-2B-3B-4A-5B 6B-7A-8B-9A-10B 12B-13A-14B 15B-16B-17A-18B-19B-20A		SHEET SIZE C	
ACT. WT.	#			NO. 11A	
SUPERSEDES		MODEL OR TITLE "P" APPARATUS	DRAWING NO. Y-5024	TOTAL 20	
SUPERSEDED BY				SCALE FULL	

APPROVED FOR PUBLIC RELEASE

APPROVED FOR PUBLIC RELEASE

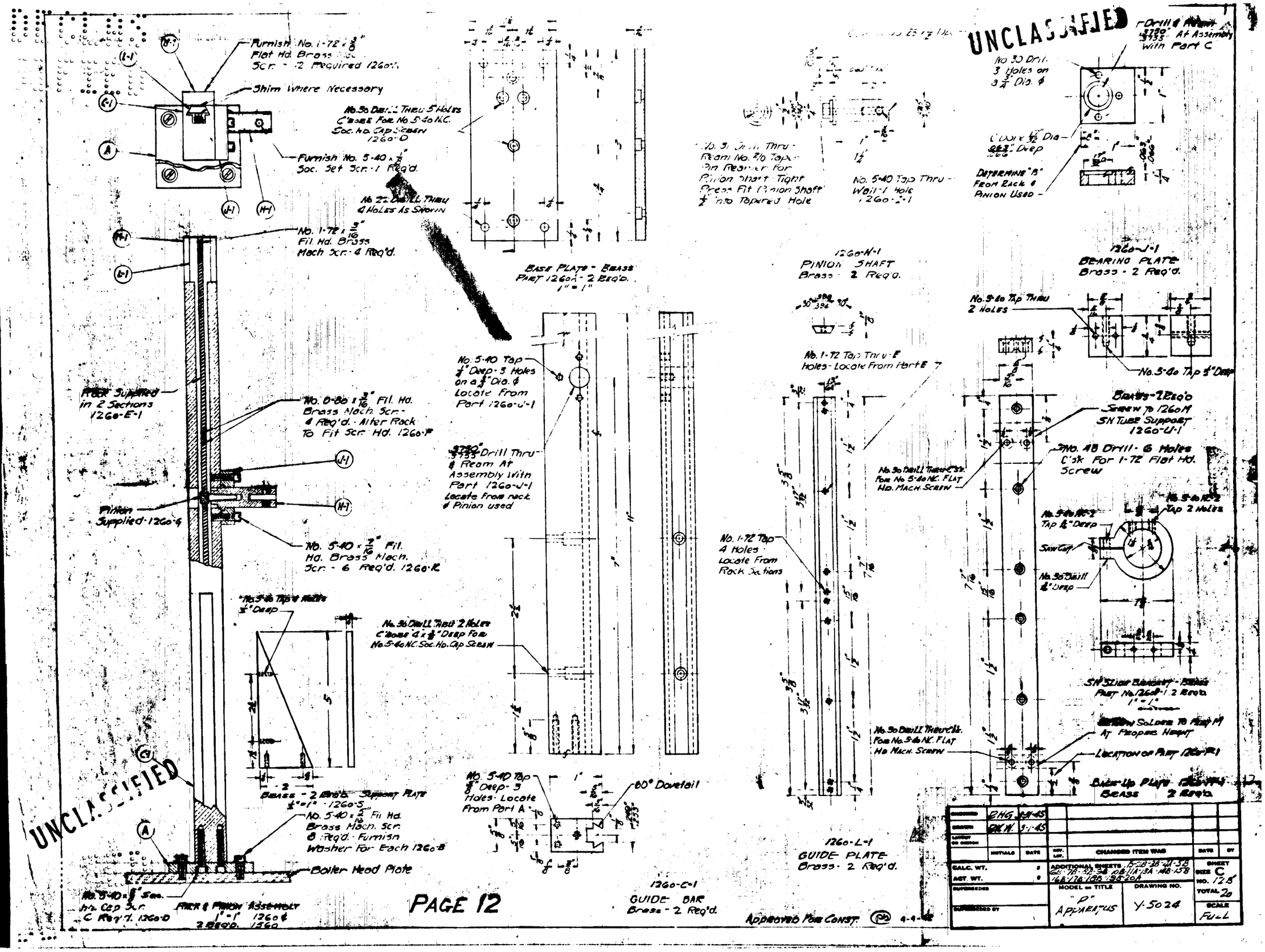

APPROVED FOR PUBLIC RELEASE

APPROVED FOR PUBLIC RELEASE

UNCLASSIFIED

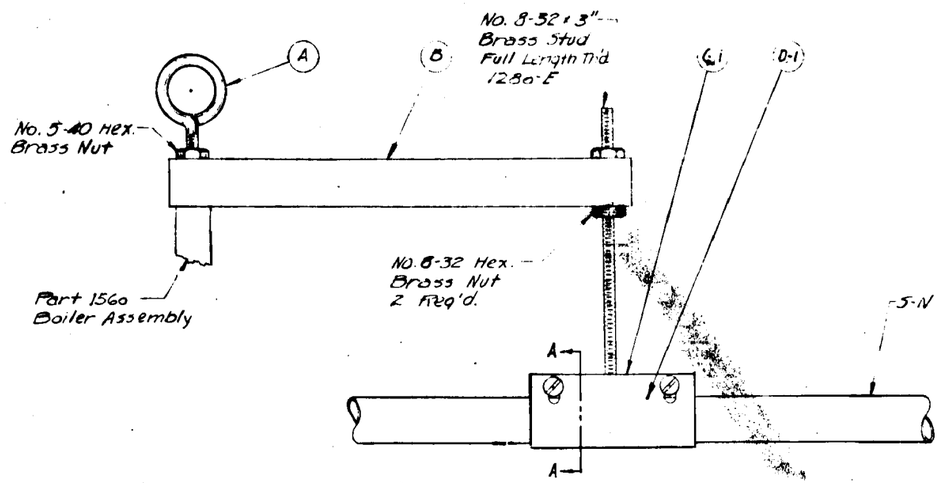

FRONT VIEW
SN TUBE SUPPORT
1280

1280
ASSEMBLY
1" = 1"
2 REQ'D.

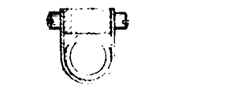

REMOVED SECTION
A-A

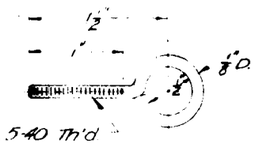

1280-A
EYE-BOLT & NUT
Mat'l. - Brass - 4 Req'd.

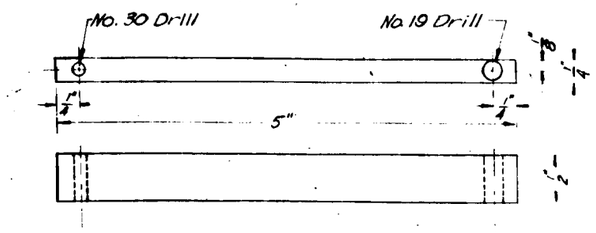

1280-B
ARM.
Mat'l. - Brass - 2 Req'd.

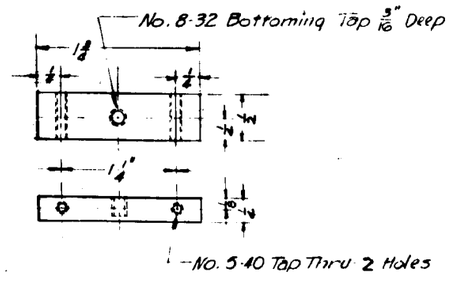

1280-C-1
BRACKET
Mat'l. - Brass - 2 Req'd.

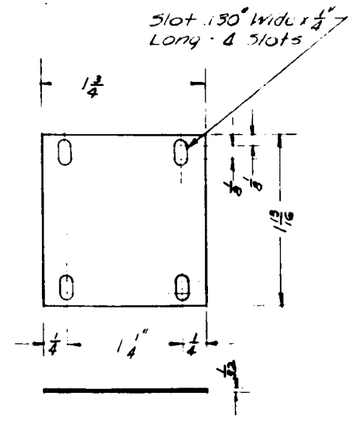

1280-D-1
CLAMP
Mat'l. - Brass - 2 Req'd.
Bend On a 1/2" Dia. Mandrel
As Shown By Section A-A

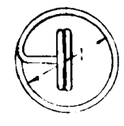

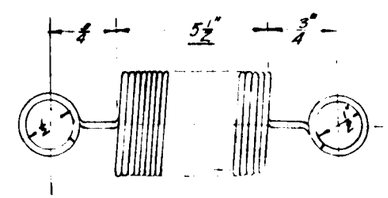

SPRING - .0625 DIA - CLOSE WOUND
PART 1260-R
2 REQ'D.

APPROVED FOR CONST. 4-4-45

PAGE 13

UNCLASSIFIED

CHECKED	B.H.G.	9-21-45				
DRAWN	D.E.M.	2-26-45				
LAYOUT OR SKETCH						
	INITIALS	DATE	REV. LET.	CHANGED ITEM WAS	DATE	BY

CALC. WT. #	ADDITIONAL SHEETS 1A-2B-3B-4A-5B 6-B 7A 8B 9A 10B ... A-12B-14B-15B 16A-17B-18B-19B 20A		SHEET SIZE C
ACT. WT. #			NO. 13A
SUPERSEDES	MODEL OR TITLE "P" APPARATUS	DRAWING NO. Y-5024	TOTAL 20
SUPERSEDED BY			SCALE FULL

APPROVED FOR PUBLIC RELEASE

APPROVED FOR PUBLIC RELEASE

UNCLASSIFIED

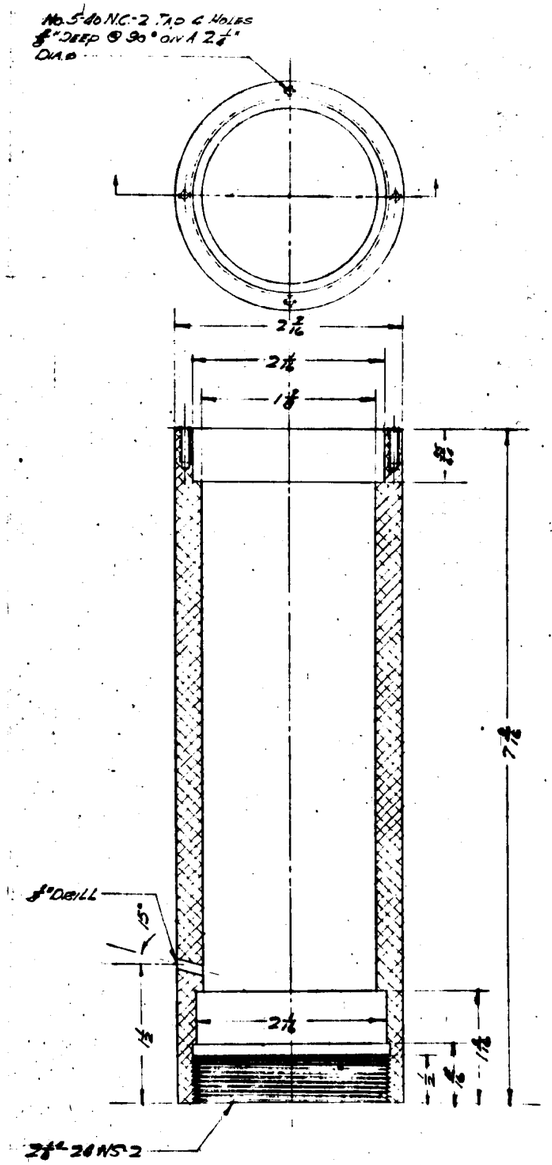

Bearing Shell - Dural
Part No. 1230-E-1 2 Req'd
1" = 1"

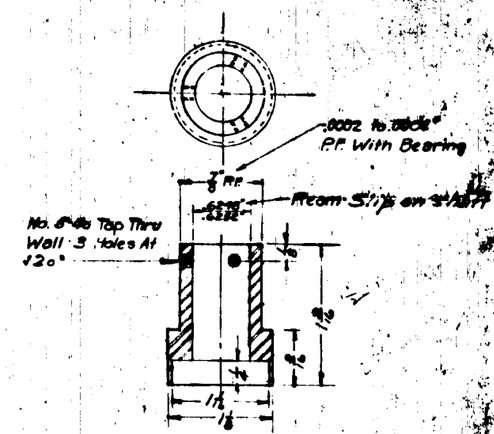

UNCLASSIFIED

1230-4-1
Bearing Liner
18-8 Stainless Steel
Two Req'd

Designed	R.H.G.	3-9-45				
Drawn	R.L.W.	1-26-46				
Layout on Sketch						
	Initials	Date	Rev. Ltr.	Changed Item Was	Date	By
Calc. Wt.	#		Additional Sheets 1B 2A-3B-4A-5B-6B 7B-8B 9A-10B-11A-12B 13A-15A-16B-17B 18B-19B-20A		Sheet Size C No. 14B Total 20	
Act. Wt.	#					
Superseded			Model or Title "P" Apparatus	Drawing No. Y-5024	Scale Full	
Superseded By						

Approved For Const. 4-4-45

APPROVED FOR PUBLIC RELEASE

APPROVED FOR PUBLIC RELEASE

UNCLASSIFIED

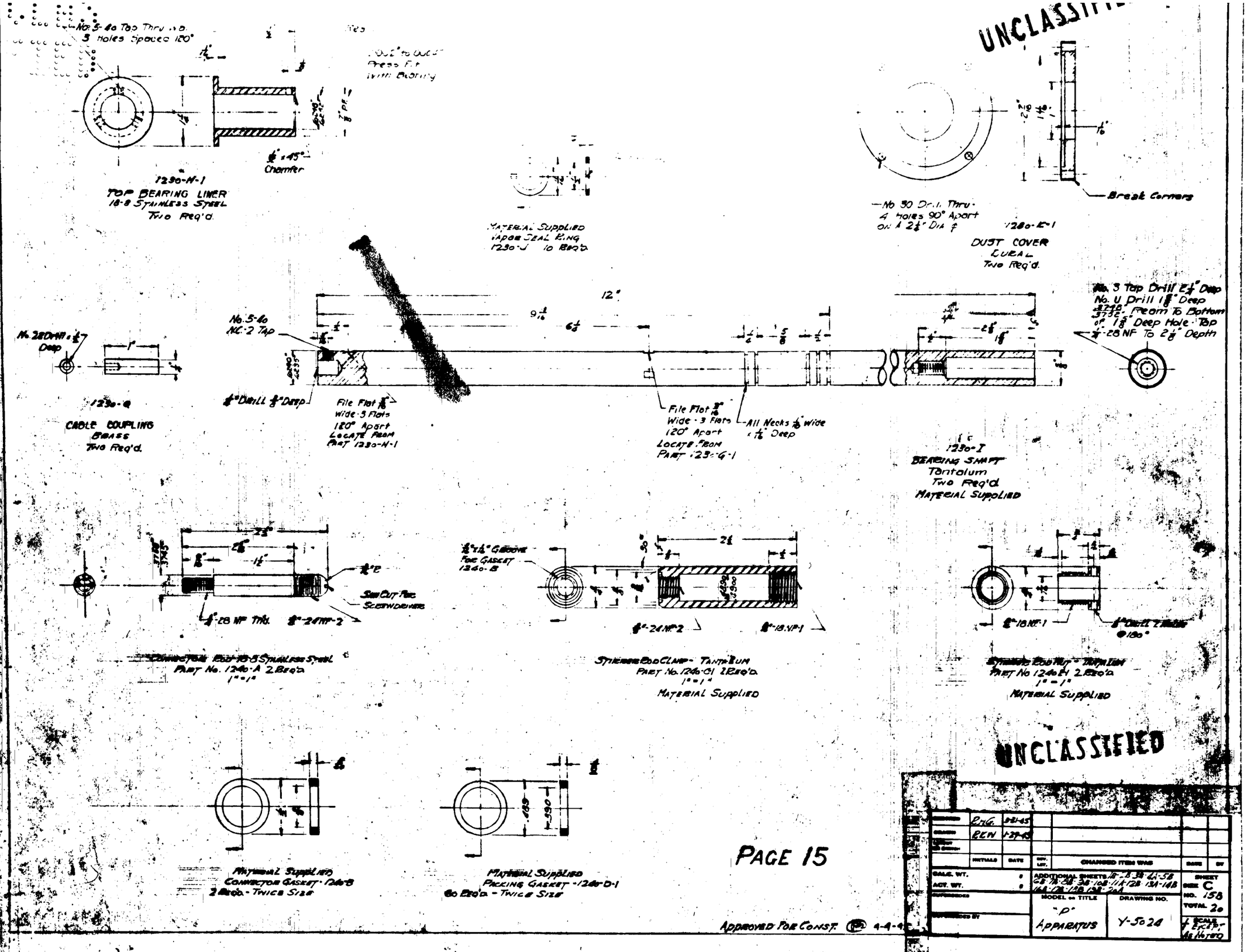

Approved For Const. 4-4-45

	R.H.G.	3-21-45			
	R.K.W.	1-29-45			
	INITIALS	DATE	CHANGED ITEM WAS	DATE	BY

GALC. WT. #
ACT. WT. #

ADDITIONAL SHEETS 1A-3A-3B-4A-5B 6B-7A-7B-8B-10B-11A-12B-13A-14B 14A-17A-17B-18B-19B-20A

MODEL or TITLE: "P" Apparatus

DRAWING NO. Y-5024

SHEET SIZE C NO. 158 TOTAL 20

SCALE Exactly As Noted

UNCLASSIFIED

APPROVED FOR PUBLIC RELEASE

APPROVED FOR PUBLIC RELEASE

UNCLASSIFIED

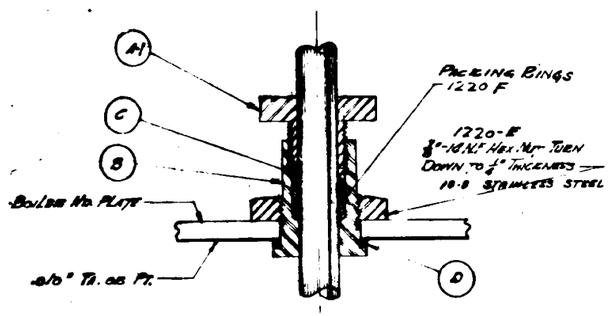

Glass Tube Bushing
5 Req'd.
1" = 1"
1220.
1520
Assembly Drawing

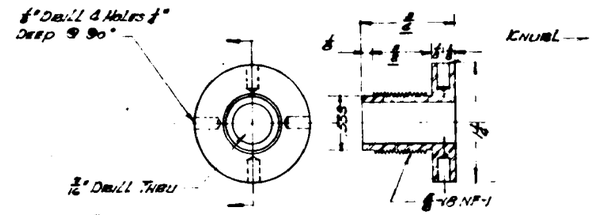

18-8 Stainless Steel - 5 Req'd.
1" = 1"
1220-A-1
Bushing Nut

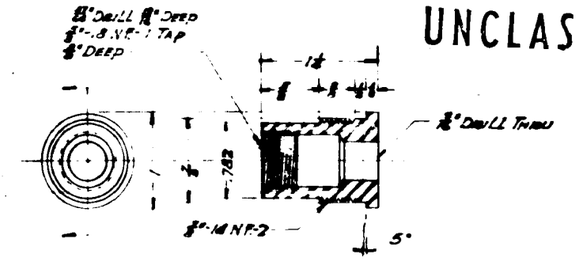

Tantalum - 5 Req'd
1" = 1"
1220-B
Bushing - Mat'l. Supplied

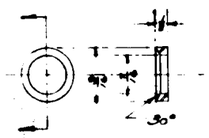

18-8 Stainless Steel - 5 Req'd.
1" = 1"
1220-C
Bushing Ring

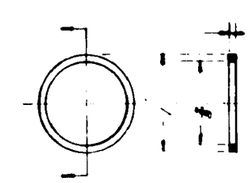

Gasket - 5 Req'd
1" = 1"
1220-D
Material Supplied

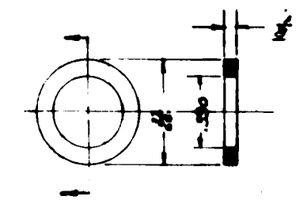

Material Supplied
Packing Ring - 1220-F-1
2" = 1" 50 Req'd.

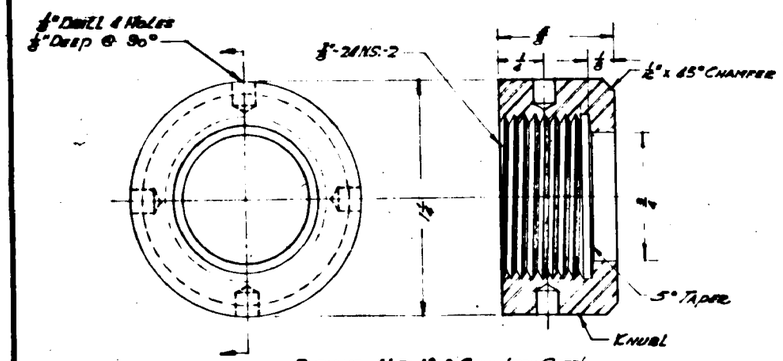

Bushing Nut - 18-8 Stainless Steel
Part No. 1250-D-1 2 Req'd.
2" = 1"

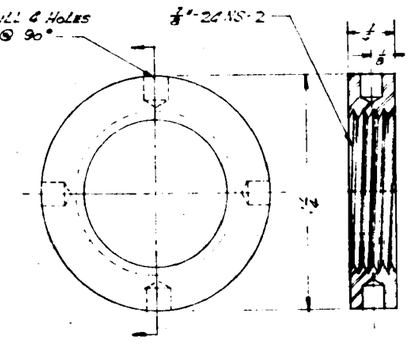

Retaining Nut - 18-8 Stainless Steel
Part No. 1250-B-2 Req'd.
2" = 1"

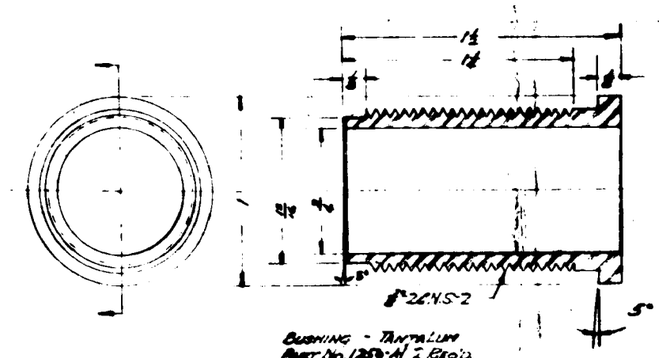

Bushing - Tantalum
Part No. 1250-A-1 2 Req'd.
2" = 1"
Material Supplied

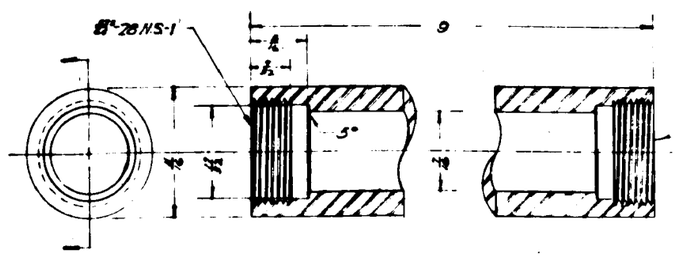

Same As Other End

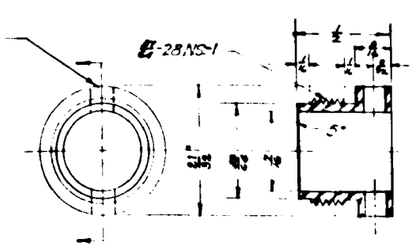

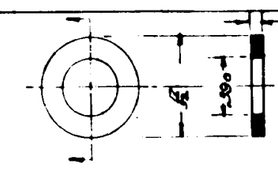

Material Supplied - 4 Req'd.
S/N Slide Tube Packing Ring
2" = 1" 1250-F-1

S/N Slide Tube - Tantalum
Part No. 1250-E-1 2 Req'd.
2" = 1"
Material Supplied

Nut - Tantalum
Part - 1250-C-1 - 4 Req'd.
2" = 1"
Material Supplied

UNCLASSIFIED

		Approved for Const.	4-4-45		
		Chief Eng.			
		Proj. Eng.			
		Designed	BM	3-19-45	
W.L.	CN-5	Drawn	By H	3-17-45	
Group Repr.	Group No.	Layout on Sketch			
			Initials	Date	

Rev. Ltr.	Changed Item Was	Date	By

Finishes: Ground / Smooth Machine / Rough Machine

Tolerances Except as Noted: Fractional ±1/64; Angles ±1/2°; Sheet Metal ±1/32; Decimals Note D

Calc. Wt. #; Act. Wt. #; Superseded; Superseded by

Additional Sheets: 15-26-38-48-58 / 64-70-78-88-102-114-128-154-166 / 154-176-188-198-204

Model or Title: "P" Apparatus

Drawing No. Y-5324

Sheet Size C; No. 16 B; Total 70; Scale As Noted

APPROVED FOR PUBLIC RELEASE

APPROVED FOR PUBLIC RELEASE

UNCLASSIFIED

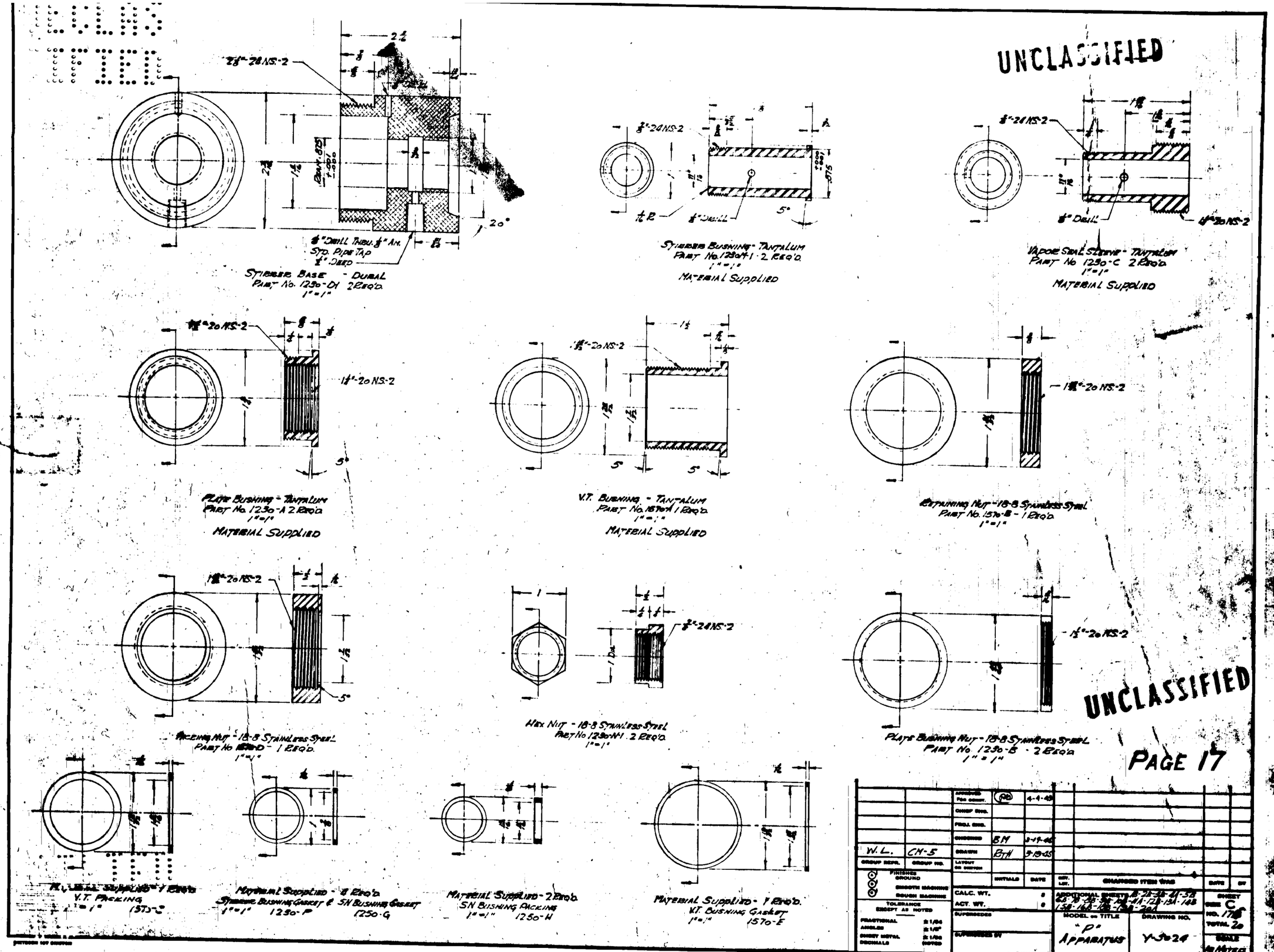

UNCLASSIFIED

APPROVED FOR PUBLIC RELEASE

APPROVED FOR PUBLIC RELEASE

UNCLASSIFIED

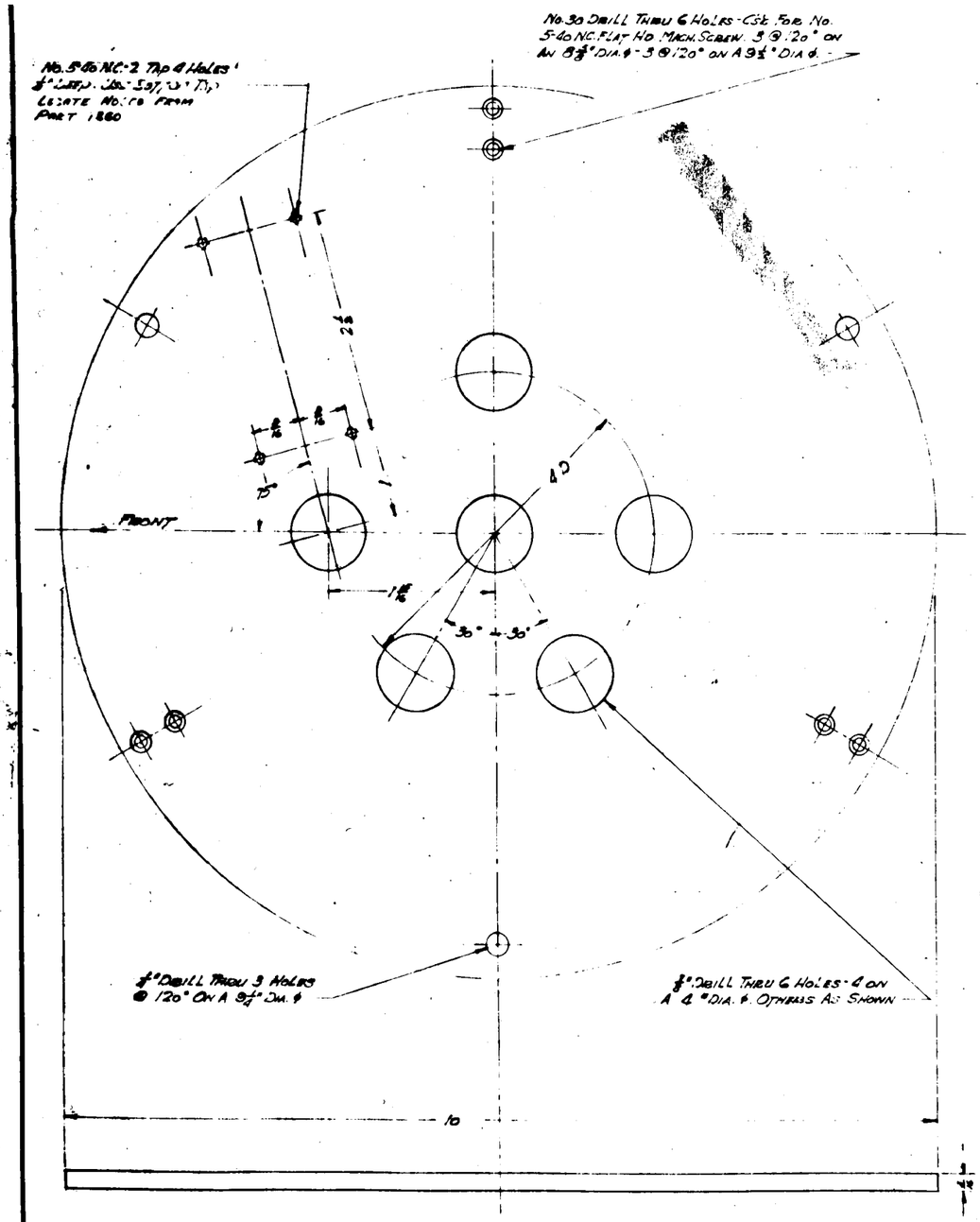

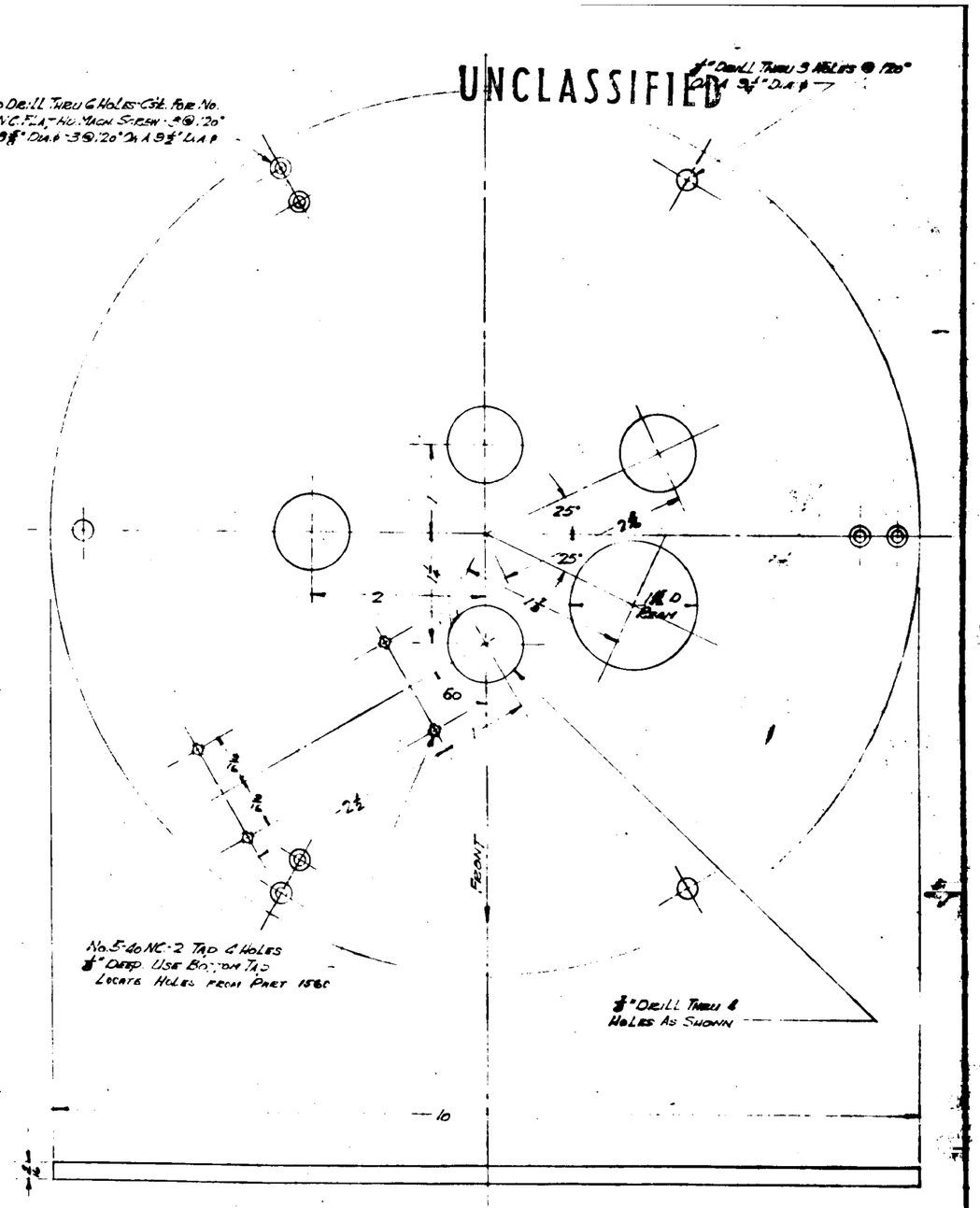

Extractor Head Plate
18-8 Stainless Steel
Part No. 1210-A 1 Req'd
1" = 1"

Boiler Head Plate
18-8 Stainless Steel
Part No. 510-A 1 Req'd.
1" = 1"

UNCLASSIFIED

		Approved For Const.	RPD	4-4-45			
		Const. Eng.					
		Proj. Eng.					
		Designed	RHG	1-31-45			
W.L.	C.Y.-5	Drawn	KTH	3-1-45			
Group Supr.	Group No.	Layout on Design					
			Initials	Date	Rev. Ltr.	Changed Item Was	Date / By

Finishes: Ground; Smooth Machine; Rough Machine

Tolerance Except As Noted: Fractional ± 1/64; Angles ± 1/2°; Sheet Metal ± 1/32; Decimals Noted

Calc. Wt. #; Act. Wt. #; Superseded; Superseded By

Additional Sheets: 18-2A-3A-4A-5A 22-3A-3B-4B-5B-6B-11A-12B-13A-14B 15A-16A-17A-18A-20A

Model or Title: "P" Apparatus

Drawing No. Y-5024

Sheet Size C; No. 18B; Total 20; Scale As Noted

APPROVED FOR PUBLIC RELEASE

APPROVED FOR PUBLIC RELEASE

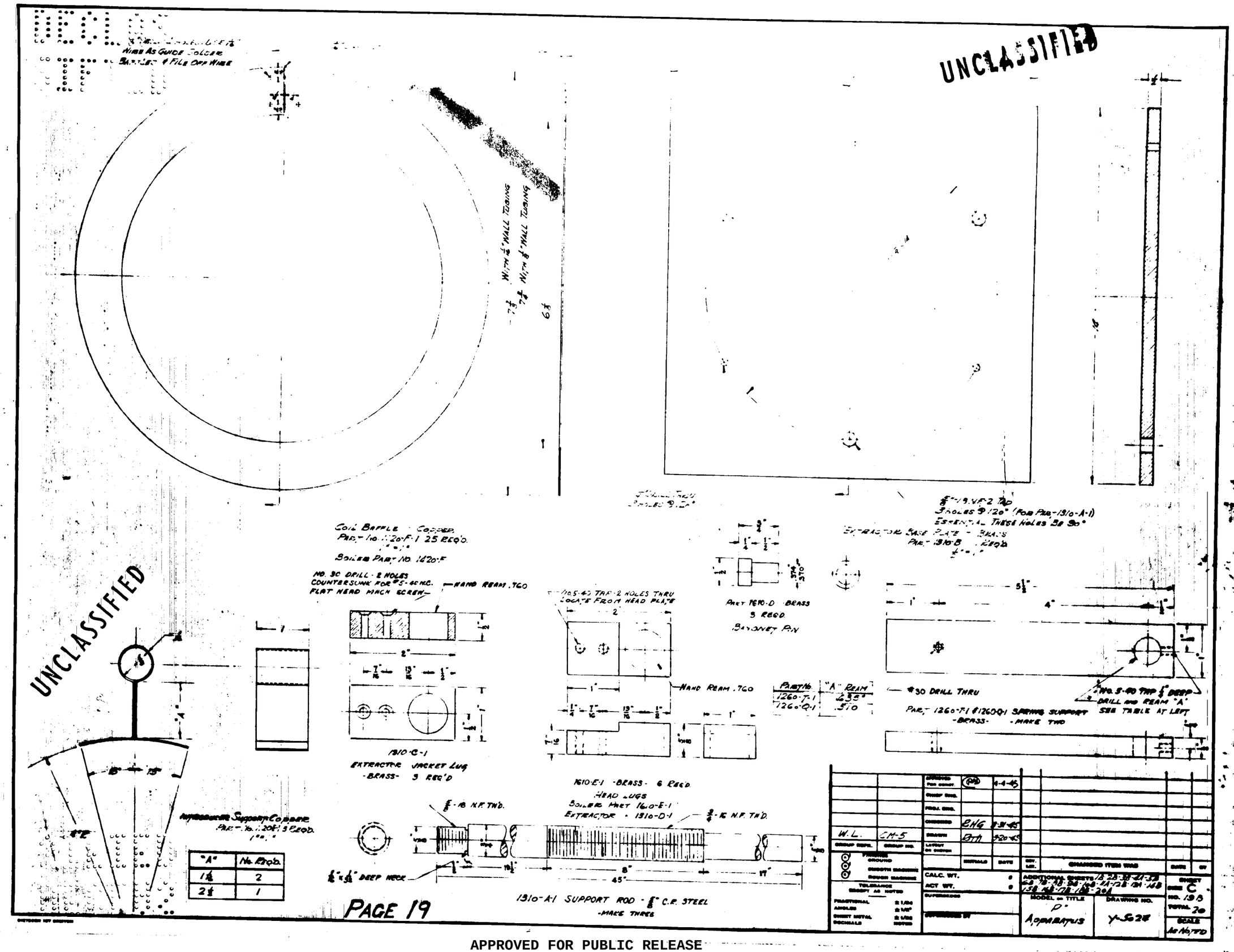

APPROVED FOR PUBLIC RELEASE

APPROVED FOR PUBLIC RELEASE

UNCLASSIFIED

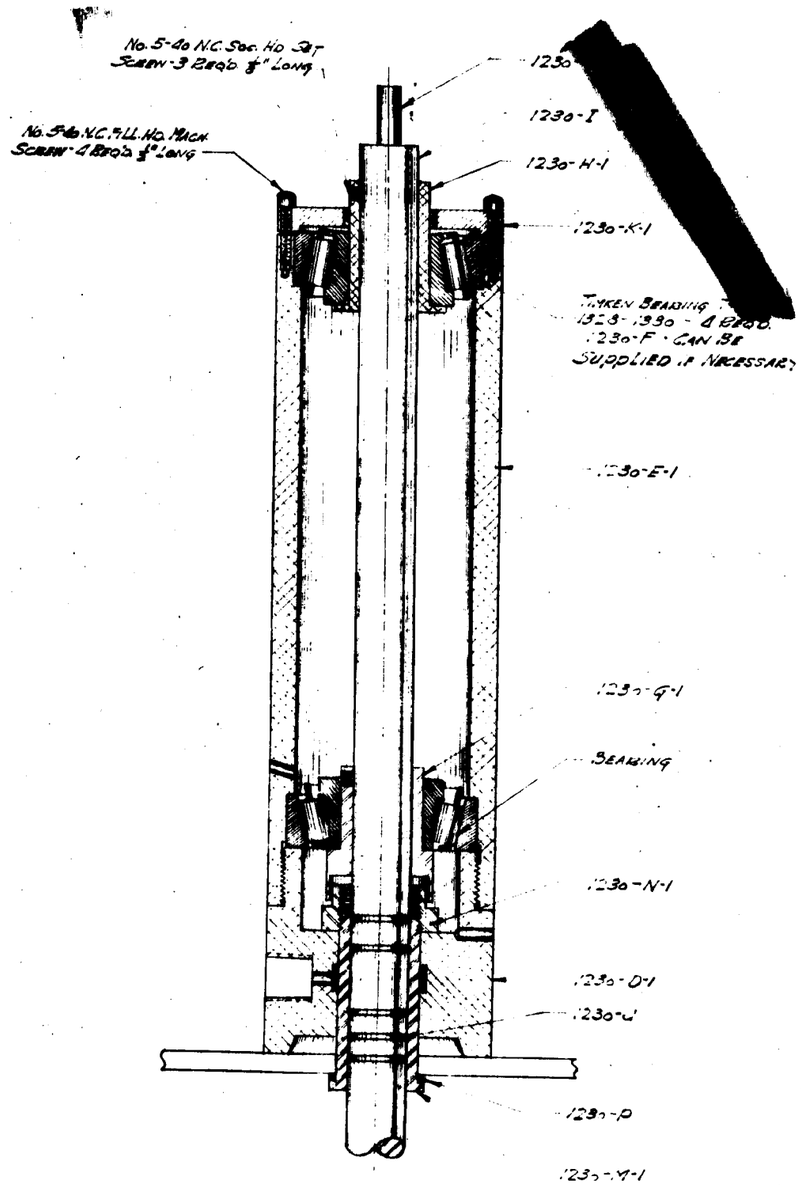

Timber Bending Sectional Assembly
2 Req'd. 1230 & 1330

PAGE 20

UNCLASSIFIED

		Approved for Const.		4-4-45
		Chief Eng.		
		Final Eng.		
		Checked	E.H.G.	3-31-45
N.L.	CH-5	Drawn	B.H.	3-26-45
Group Supv.	Group No.	Latest Co Check		
			Initials	Date

Finish Marks: Smooth Machine, Rough Machine

Tolerances Except as Noted: Fractional ±1/64; Angles ±1/8°; Sheet Metal ±1/32; Decimals Noted

Calc. Wt. ; Act. Wt. ;

Superseded ; Superseded by

Rev. Ltr.	Changed Item Tag	Date	By

Model or Type: "O" Apparatus

Drawing No. Y-5024

Sheet C; No. 2 of; Total 20; Scale Full

APPROVED FOR PUBLIC RELEASE

APPROVED FOR PUBLIC RELEASE

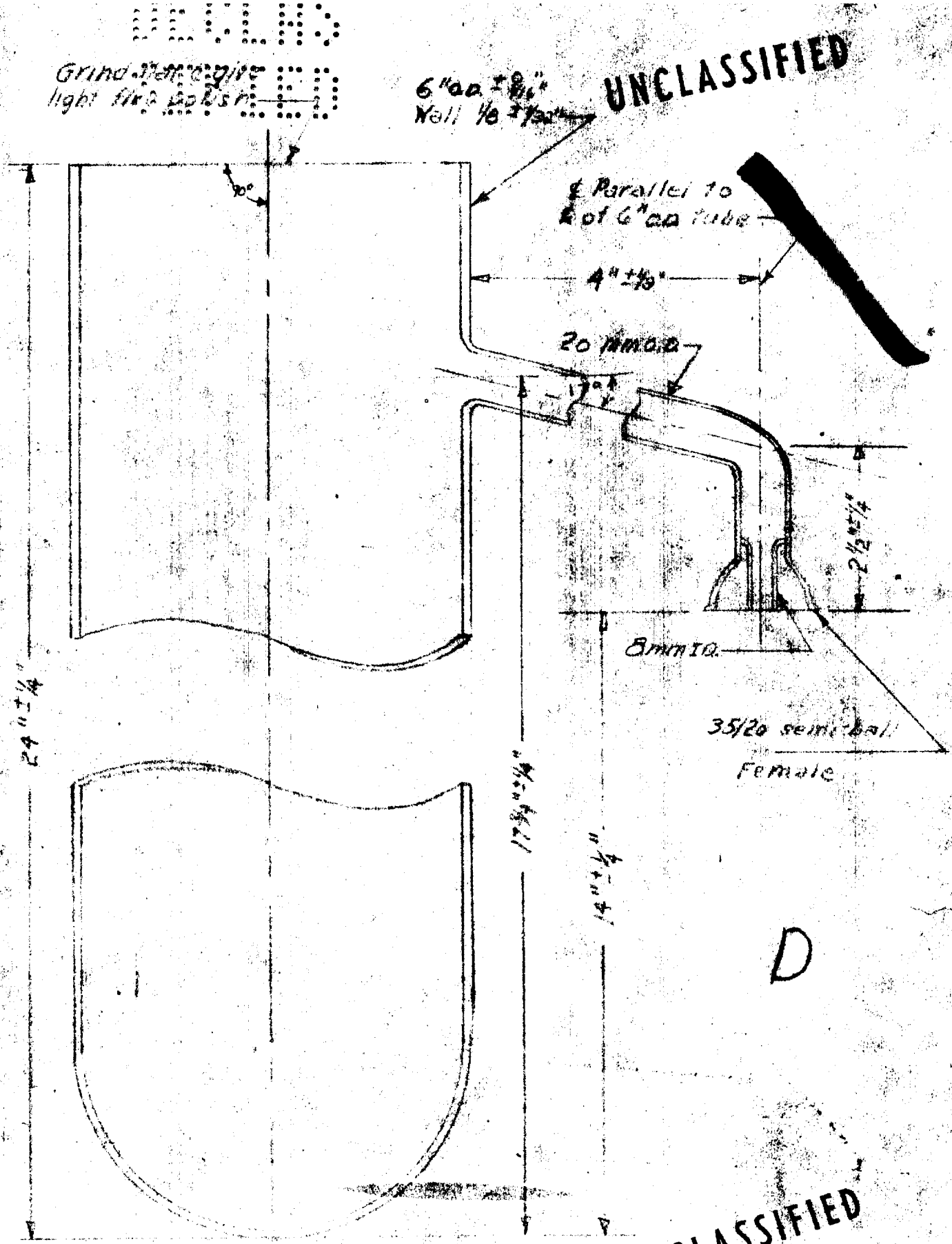

APPROVED FOR PUBLIC RELEASE

APPROVED FOR PUBLIC RELEASE

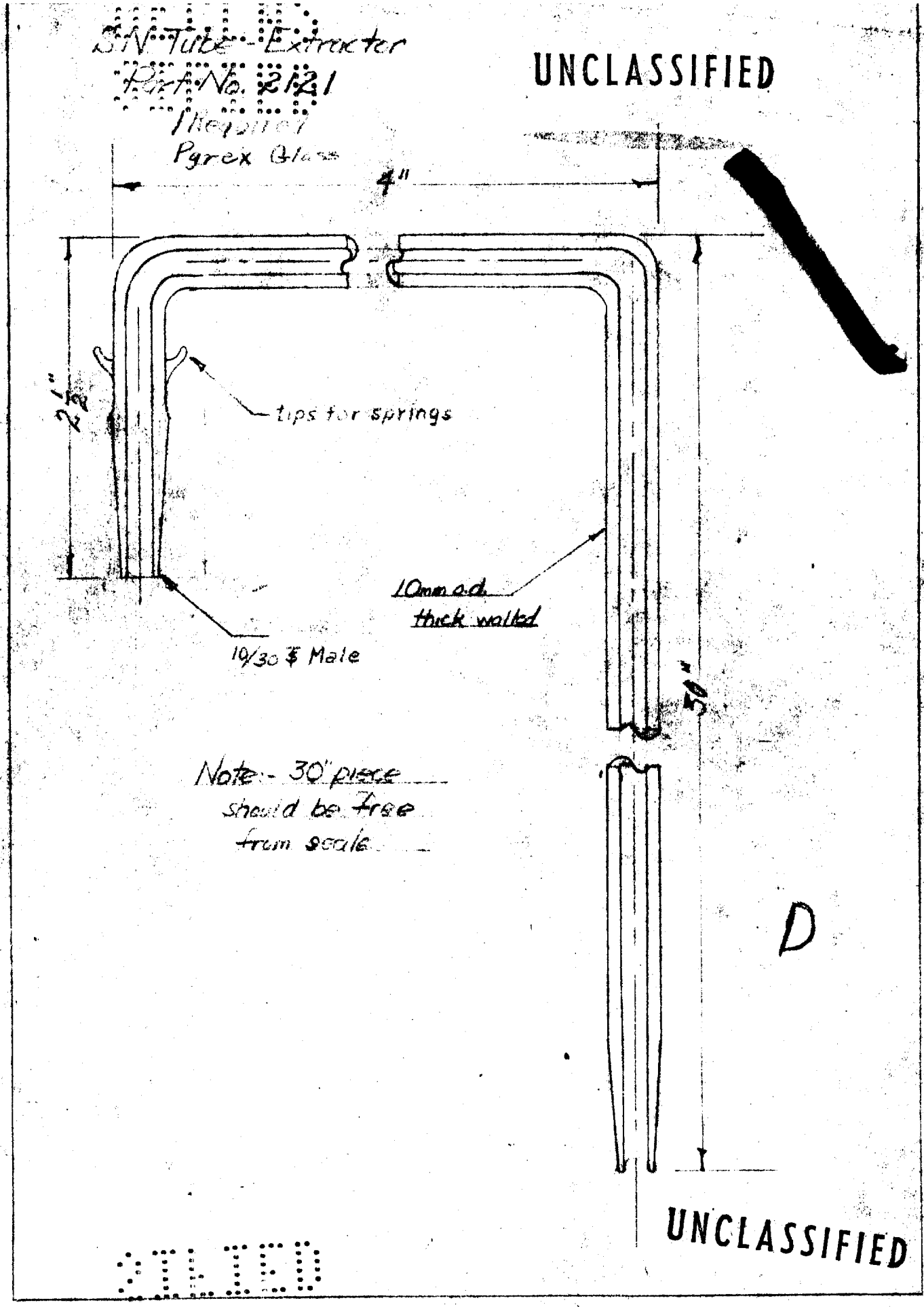

Revised 4-20-46
W.W.C.

APPROVED FOR PUBLIC RELEASE

APPROVED FOR PUBLIC RELEASE

UNCLASSIFIED

Extractor Liquid Introducer tube
Part No. 2141
1 required
Pyrex Glass

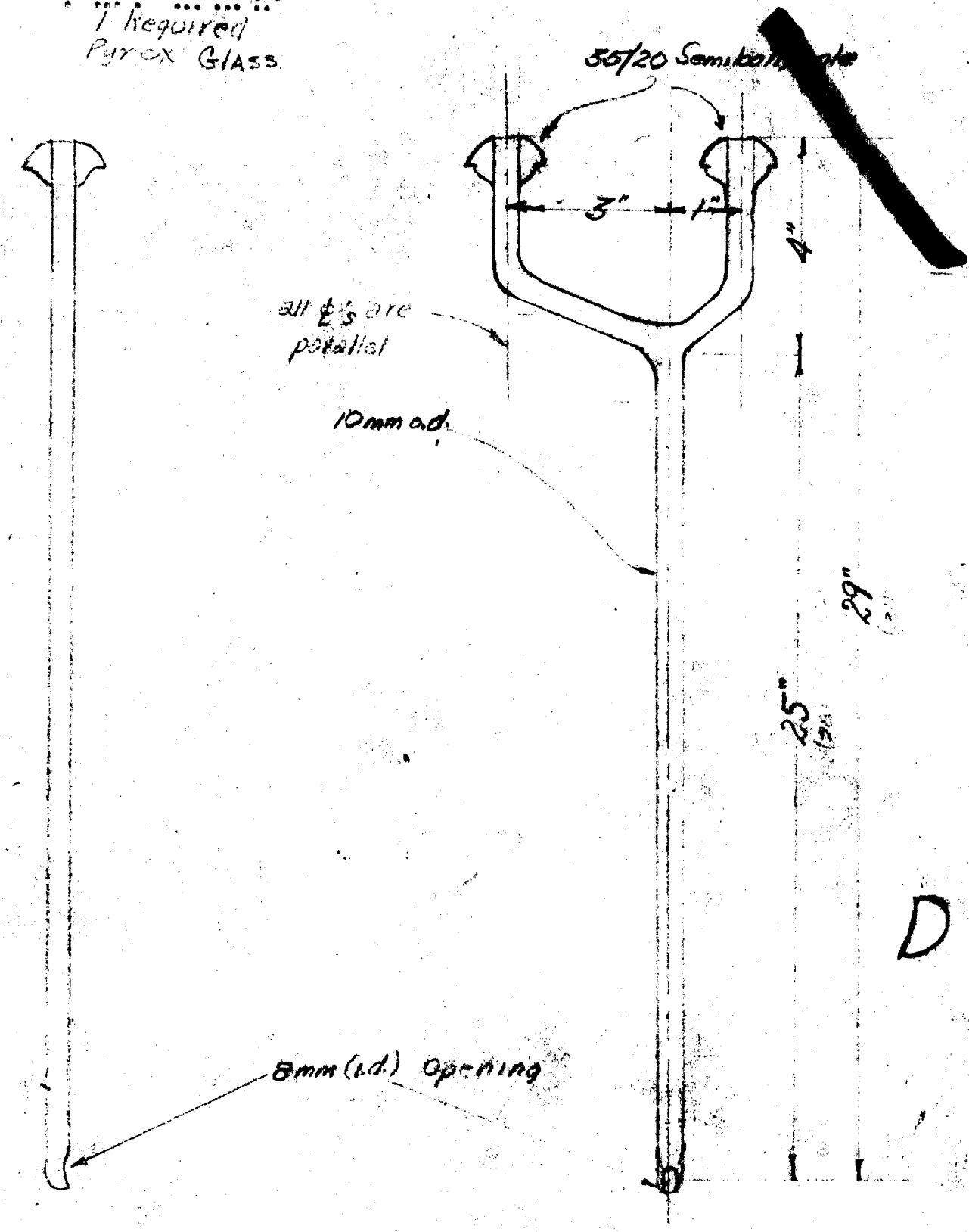

UNCLASSIFIED

Revised 1 2 75

APPROVED FOR PUBLIC RELEASE

APPROVED FOR PUBLIC RELEASE

UNCLASSIFIED

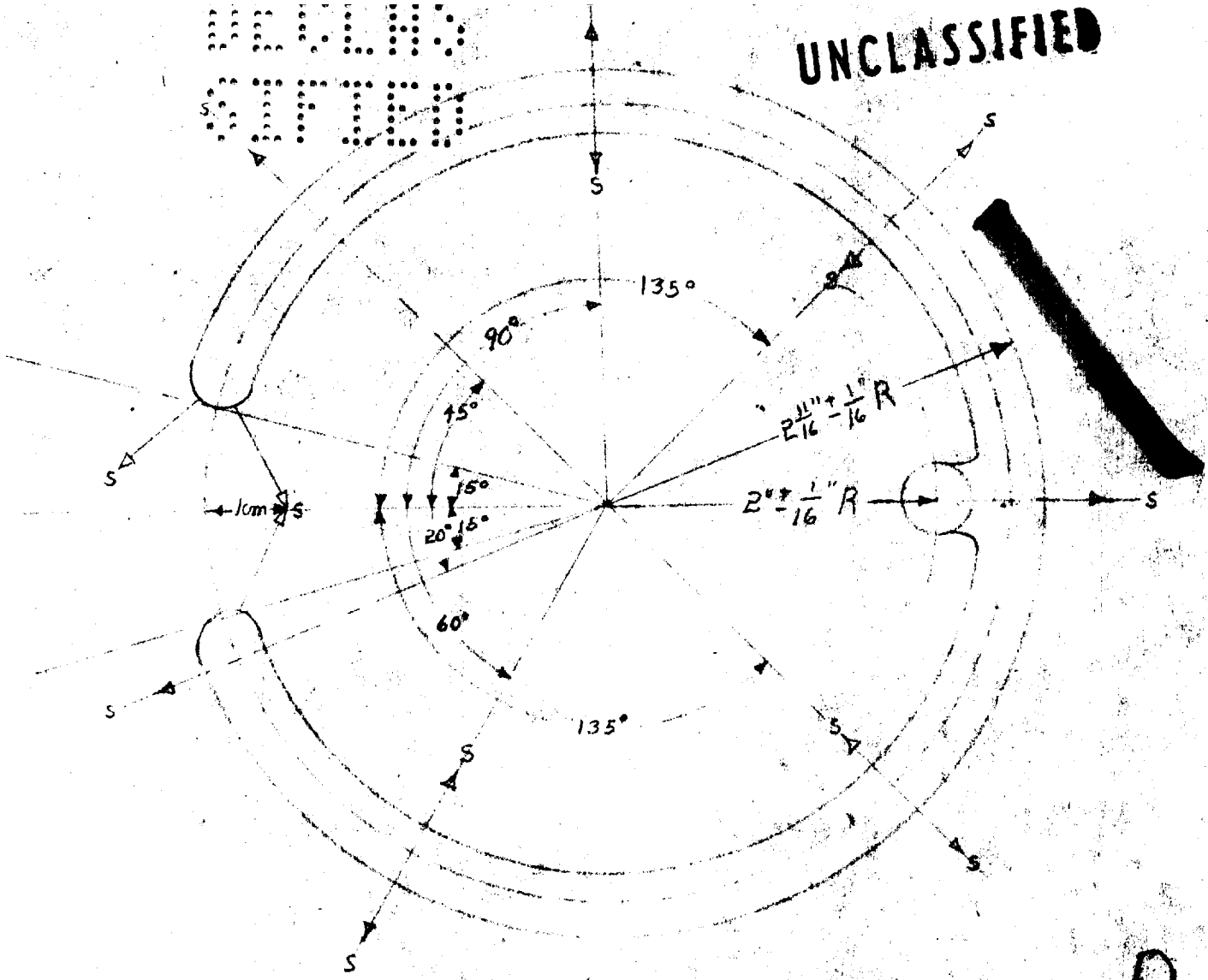

D

Wash Ring

Part No 2150 Scale 1"=1"

Pyrex Glass – One Req'd.

Note: The symbol → S indicates a ½ mm I.D. hole in the glass tube to direct a stream of water in the direction indicated by the arrow

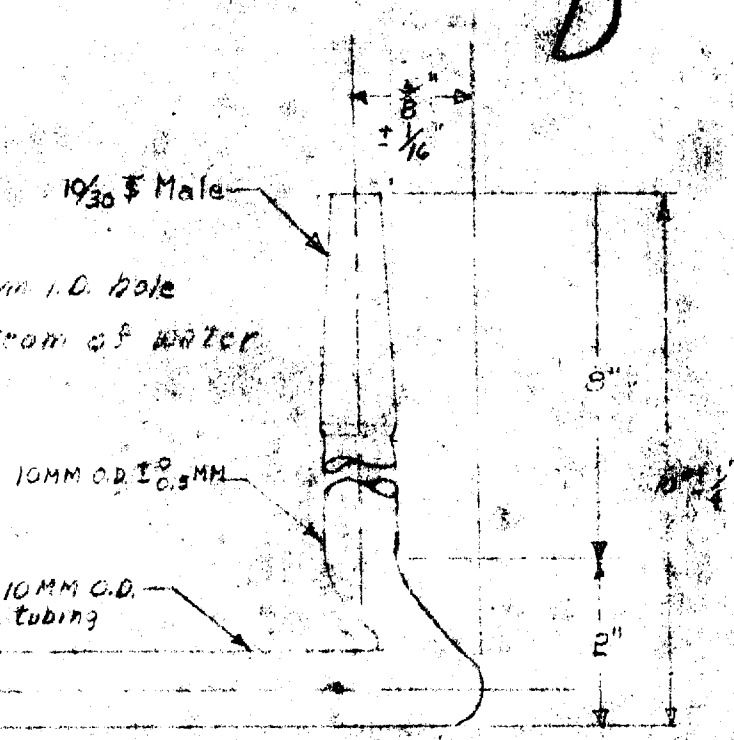

UNCLASSIFIED

APPROVED FOR PUBLIC RELEASE

APPROVED FOR PUBLIC RELEASE

UNCLASSIFIED

EXTRACTOR THERMOCOUPLE TUBE
PART No. 2161
PYREX GLASS

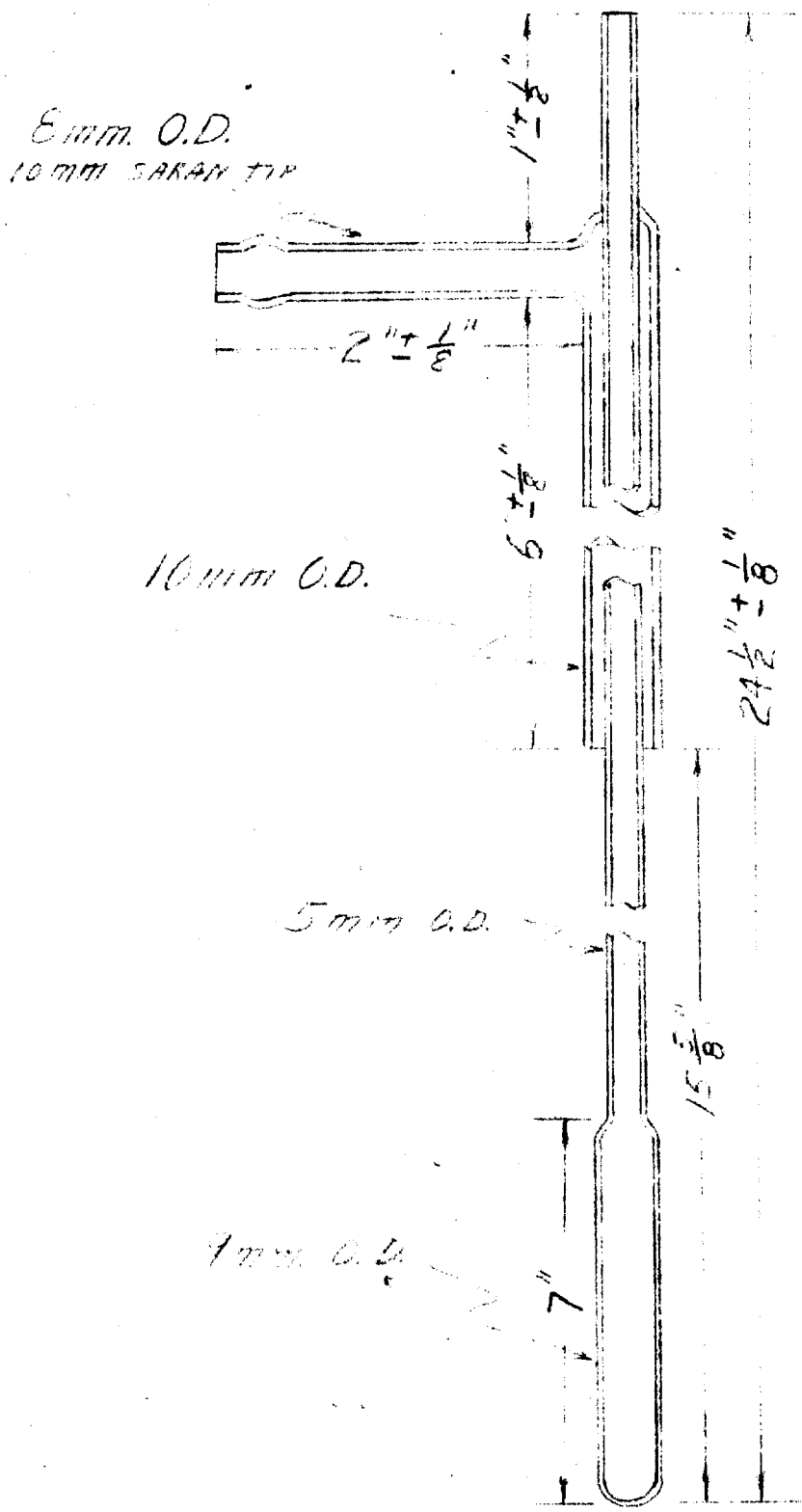

9-19-45

UNCLASSIFIED

APPROVED FOR PUBLIC RELEASE

APPROVED FOR PUBLIC RELEASE

Extractor-Stirrer
Part No. 2170
Pyrex Glass
One Req'd.

UNCLASSIFIED

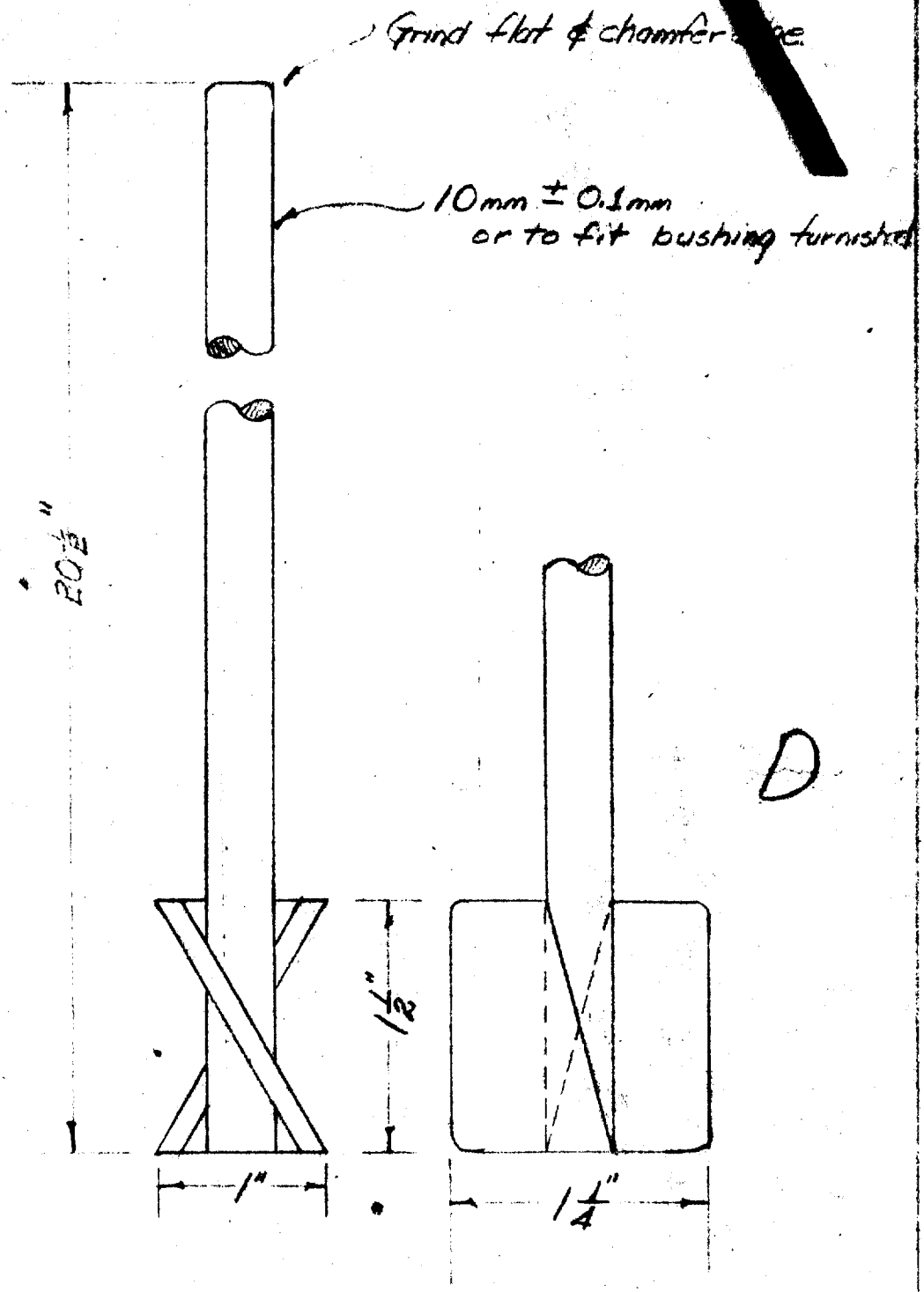

UNCLASSIFIED

revised 4-20-45

APPROVED FOR PUBLIC RELEASE

APPROVED FOR PUBLIC RELEASE

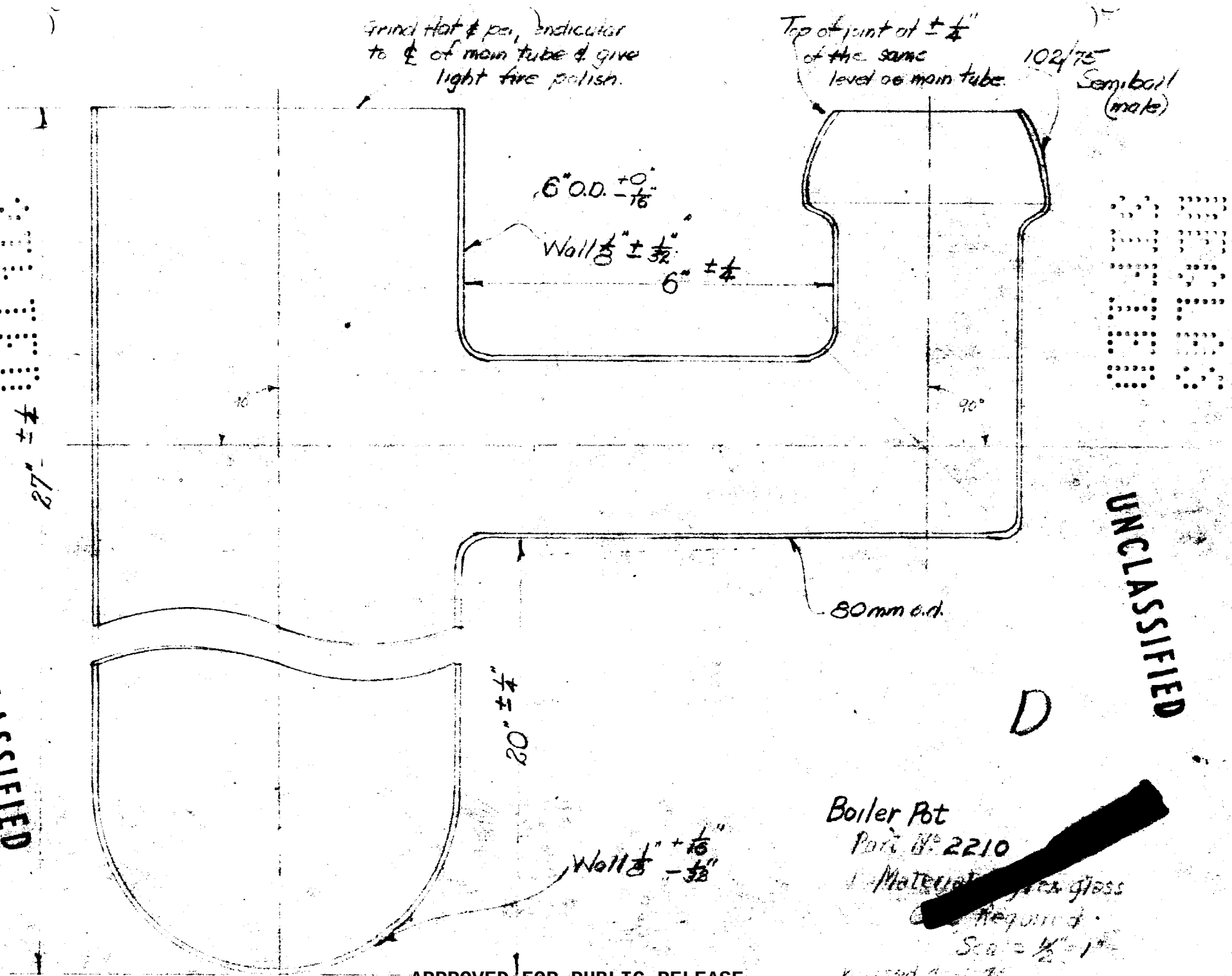

UNCLASSIFIED

UNCLASSIFIED

APPROVED FOR PUBLIC RELEASE

APPROVED FOR PUBLIC RELEASE

UNCLASSIFIED

S.N Tube Boiler
Part No 2220
Material Pyrex Glass
One Required Scale 1"=1"

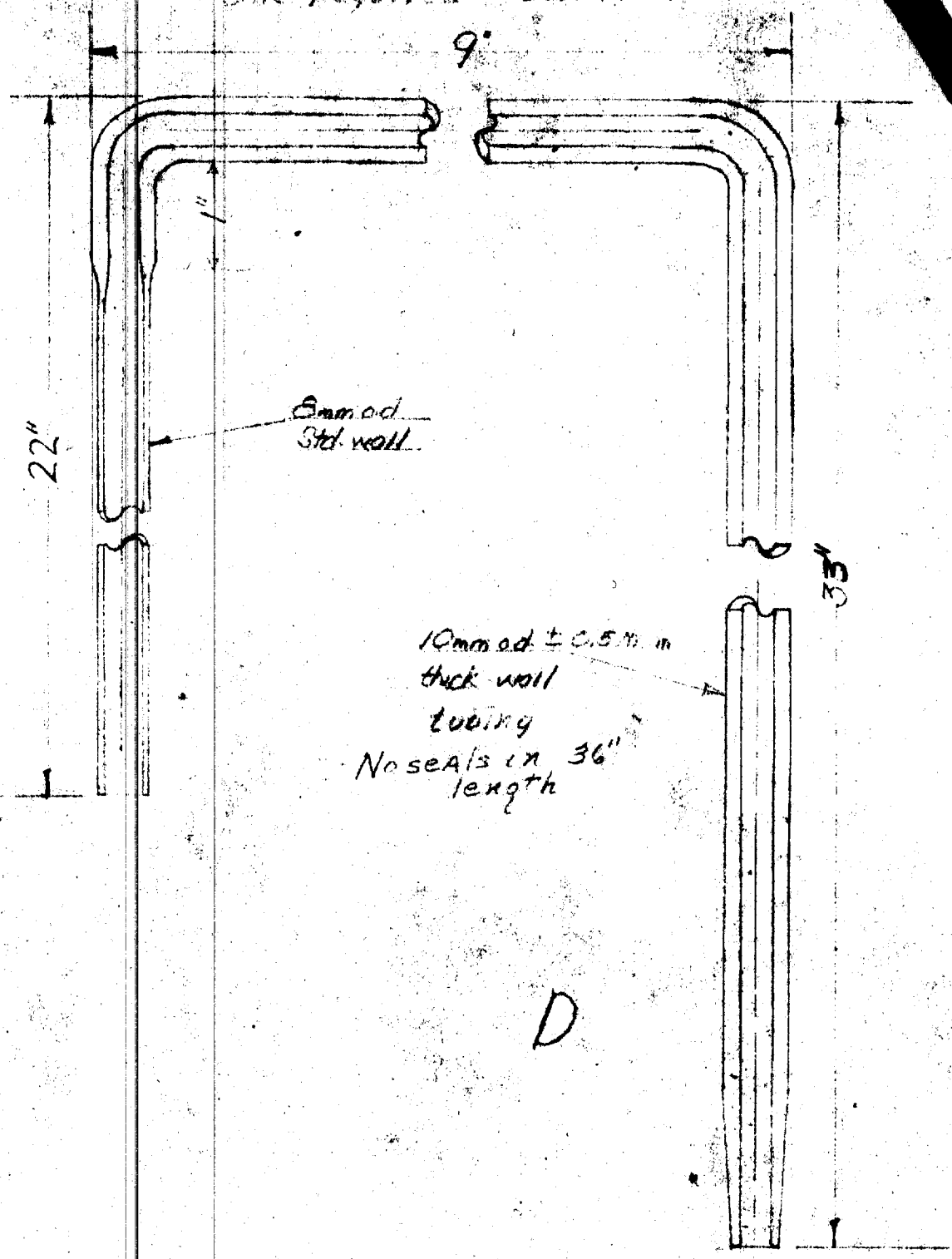

D

UNCLASSIFIED

APPROVED FOR PUBLIC RELEASE

APPROVED FOR PUBLIC RELEASE

UNCLASSIFIED

Boiler Liquid
Introducer Tube
Part [redacted] 2240
Material Pyrex glass
One Required
Scale [redacted]

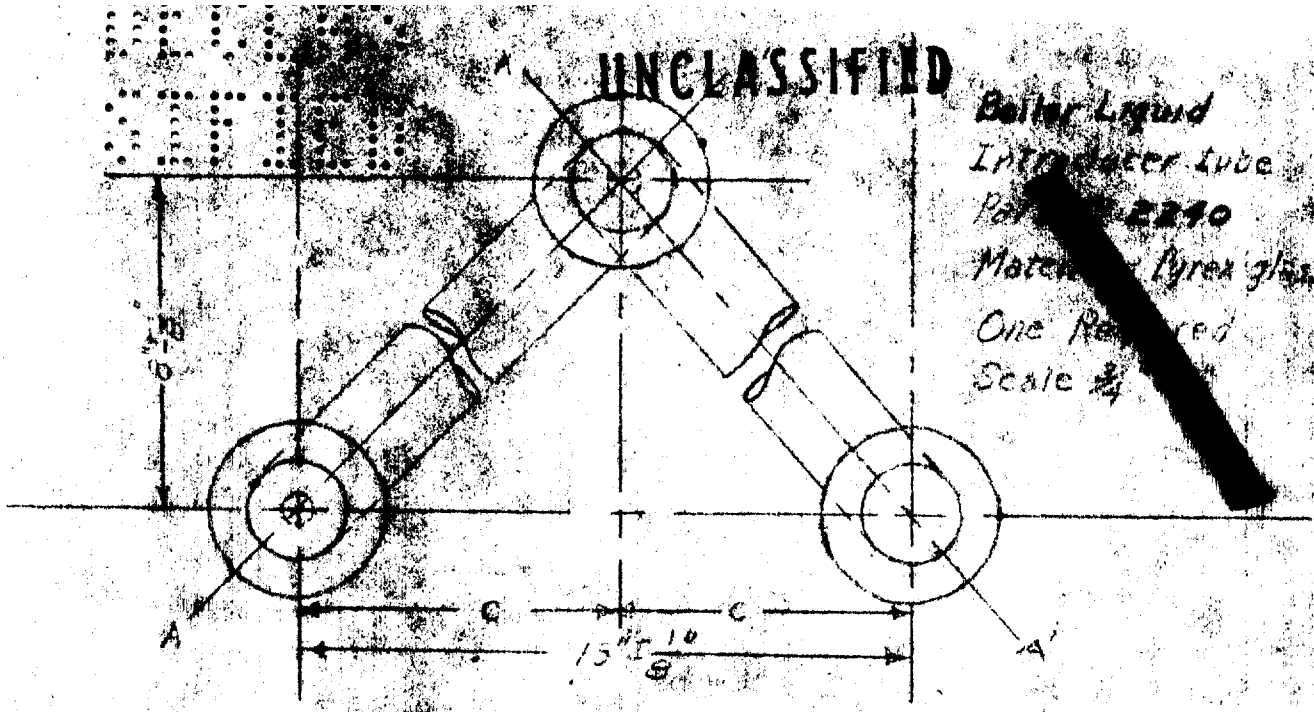

Make Patterns when submitting

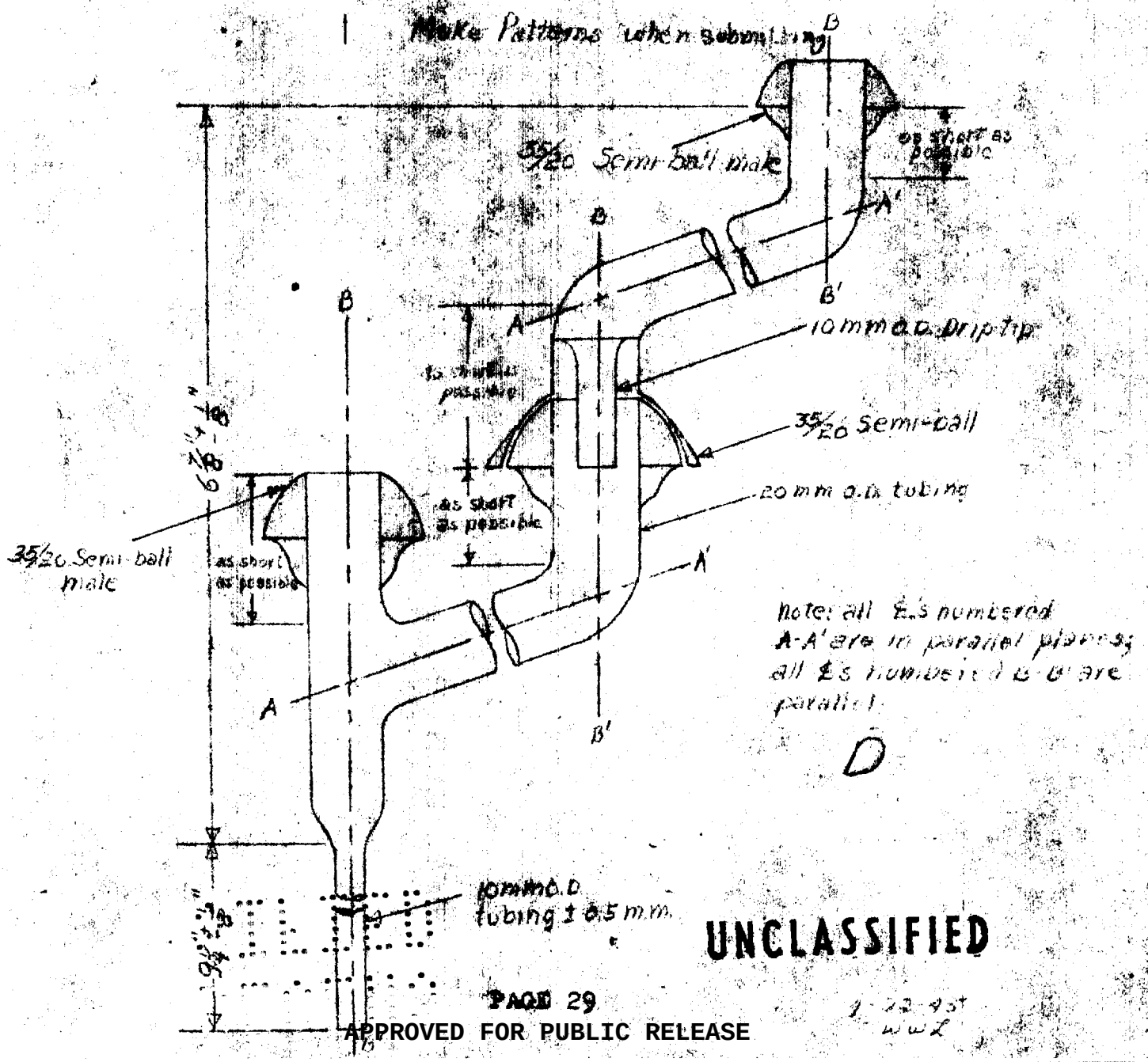

note: all ℄'s numbered A-A' are in parallel planes; all ℄'s numbered B-B' are parallel.

D

UNCLASSIFIED

APPROVED FOR PUBLIC RELEASE

APPROVED FOR PUBLIC RELEASE

UNCLASSIFIED

S.N. Tromter Head and Bottom
Part No 2250
Material - Glass Pyrex
1 Required
Scale 1"=1"

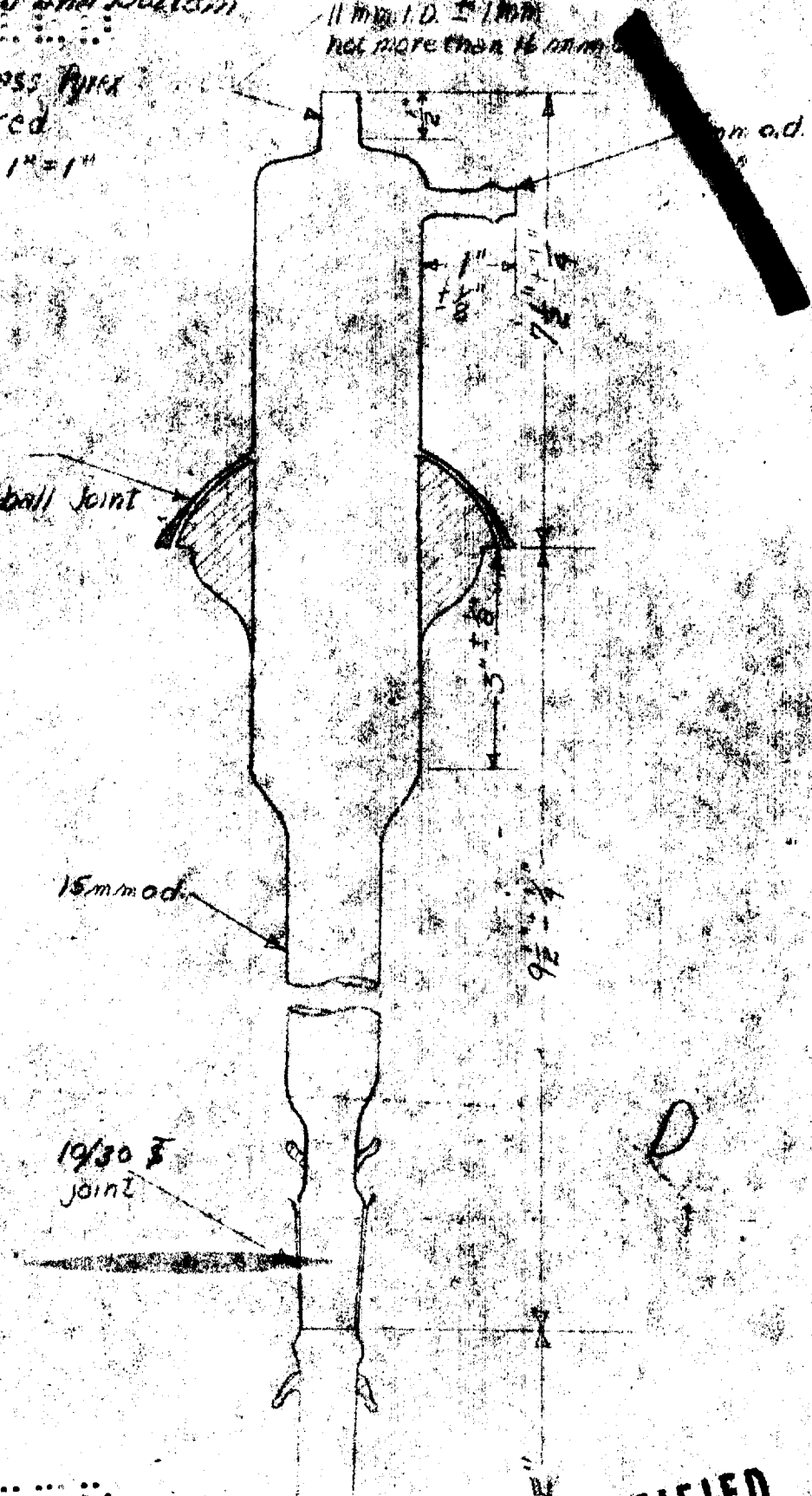

UNCLASSIFIED

APPROVED FOR PUBLIC RELEASE

APPROVED FOR PUBLIC RELEASE

UNCLASSIFIED

BOILER THERMOCOUPLE

PART No. 2261

PYREX GLASS

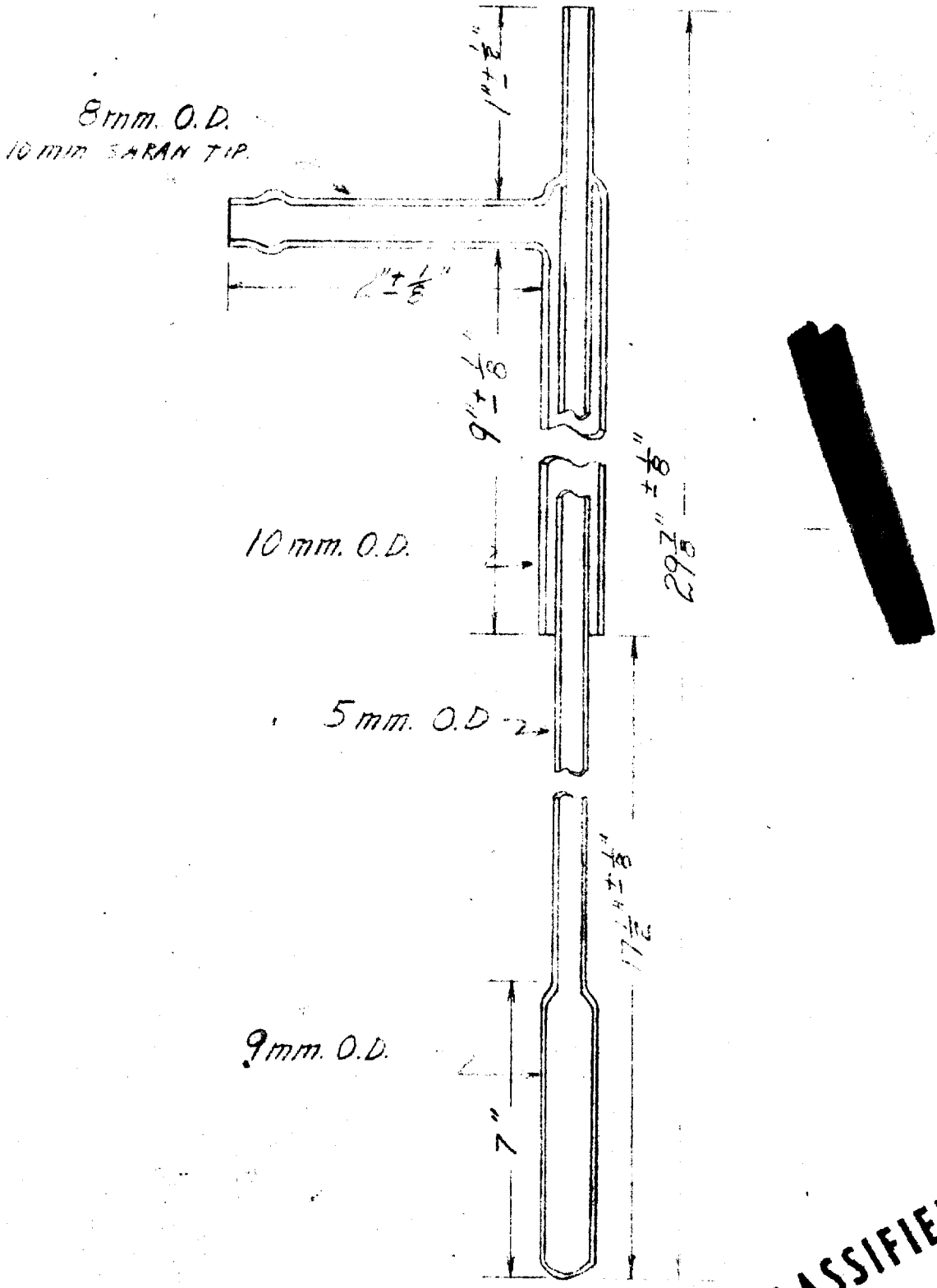

UNCLASSIFIED

APPROVED FOR PUBLIC RELEASE

APPROVED FOR PUBLIC RELEASE

Stirrer Boiler
Part No. 2270

UNCLASSIFIED

Material Glass, Pyrex
One Required
Scale 1" = 1"

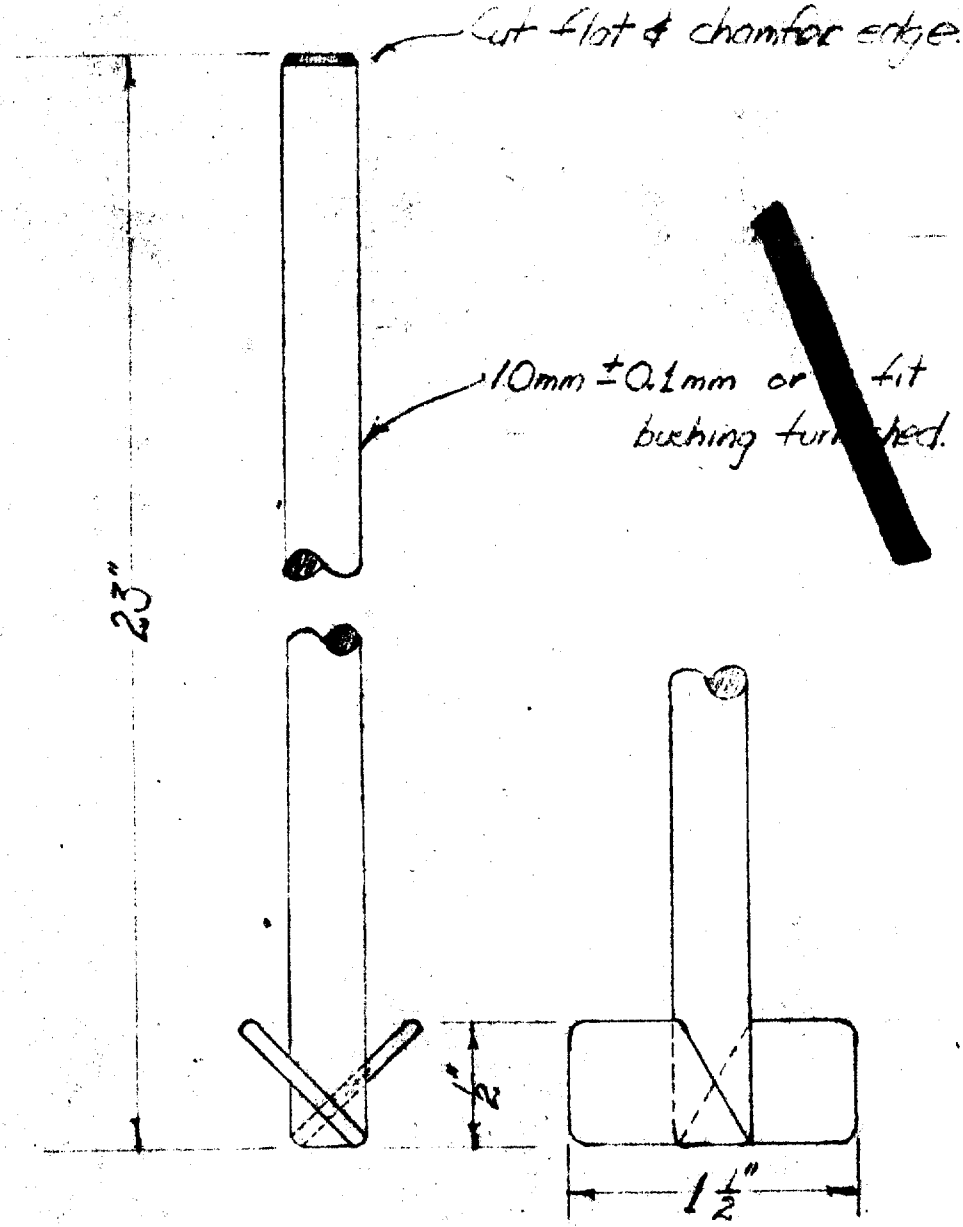

D

UNCLASSIFIED

APPROVED FOR PUBLIC RELEASE

APPROVED FOR PUBLIC RELEASE

REAGENT RESERVOIR
PART No. 2311
PYREX GLASS

UNCLASSIFIED

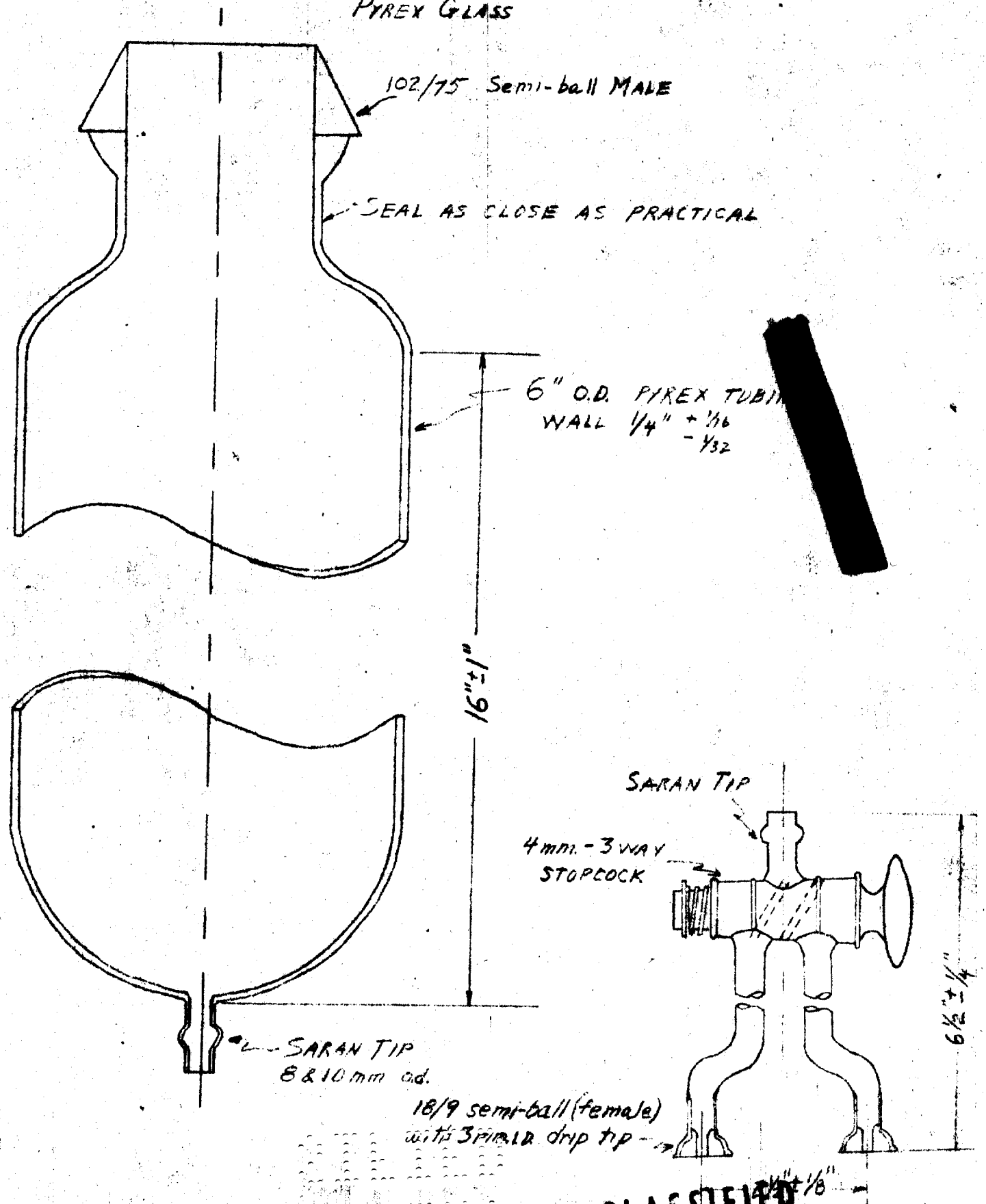

UNCLASSIFIED

9-19-45 ACP

APPROVED FOR PUBLIC RELEASE

APPROVED FOR PUBLIC RELEASE

UNCLASSIFIED

Reagent Reservoir Cap.
Part No. 2320
Pyrex Glass

One Part per Apparatus

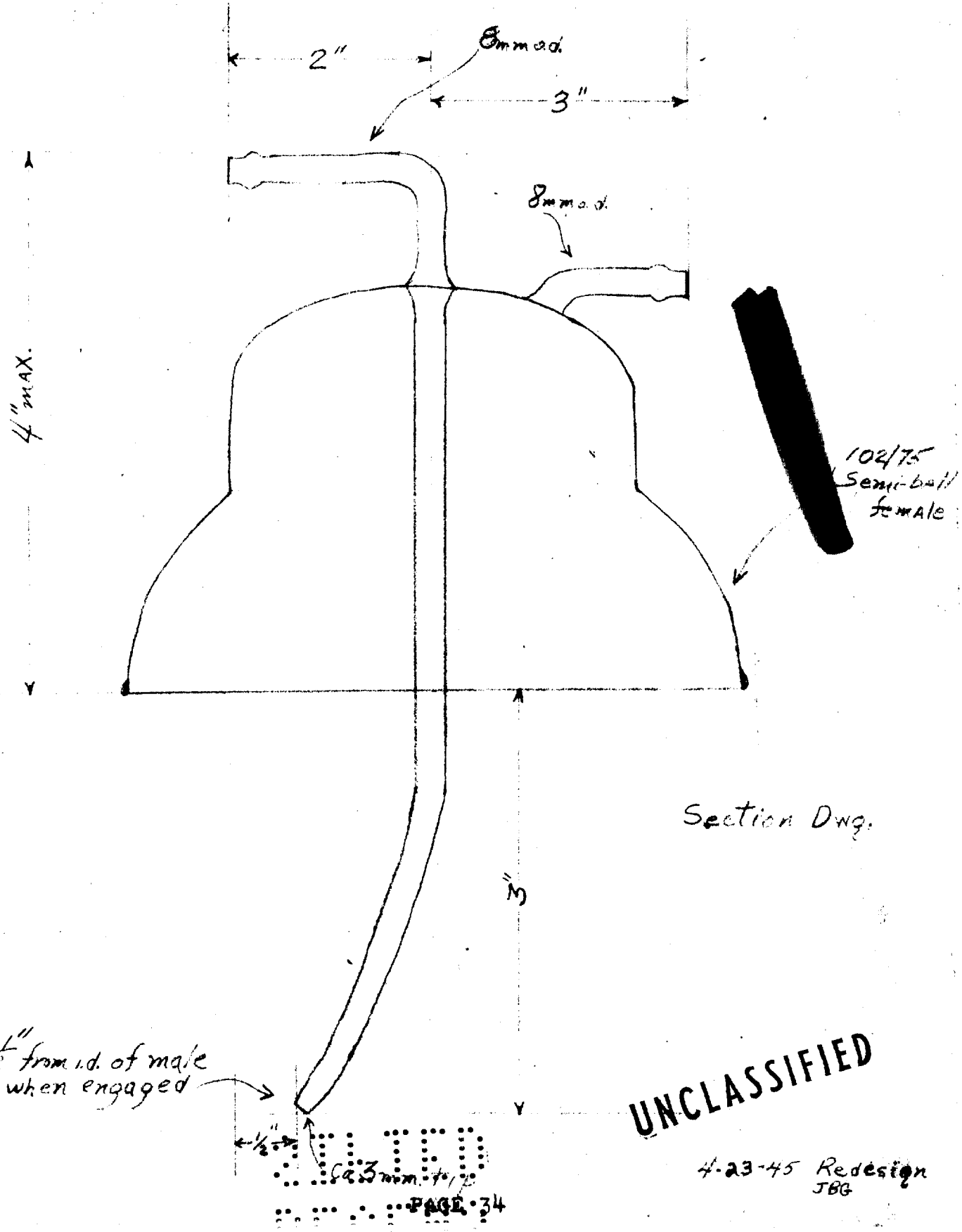

UNCLASSIFIED

4-23-45 Redesign
JBG

APPROVED FOR PUBLIC RELEASE

APPROVED FOR PUBLIC RELEASE

UNCLASSIFIED

NITRIC ACID RESERVOIR
PART NO. 331
PYREX GLASS

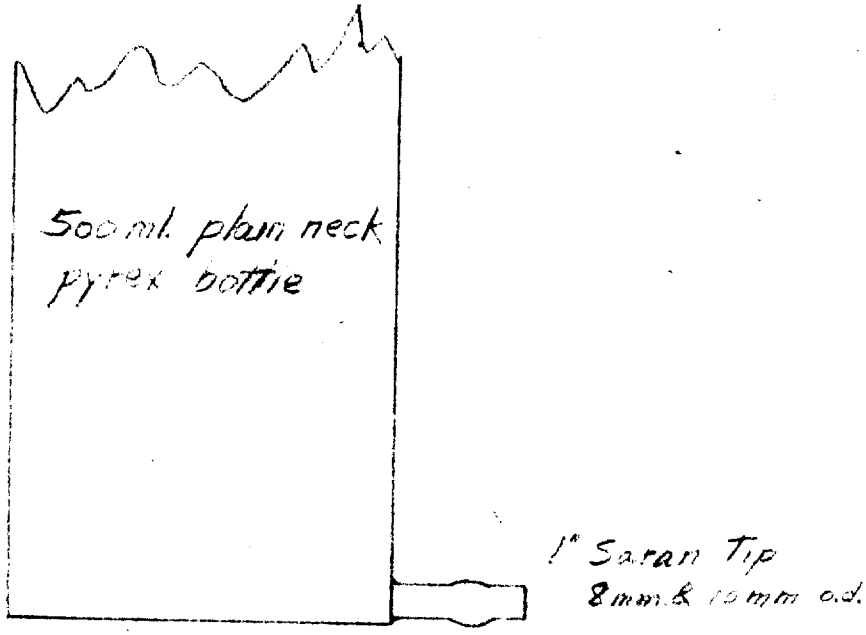

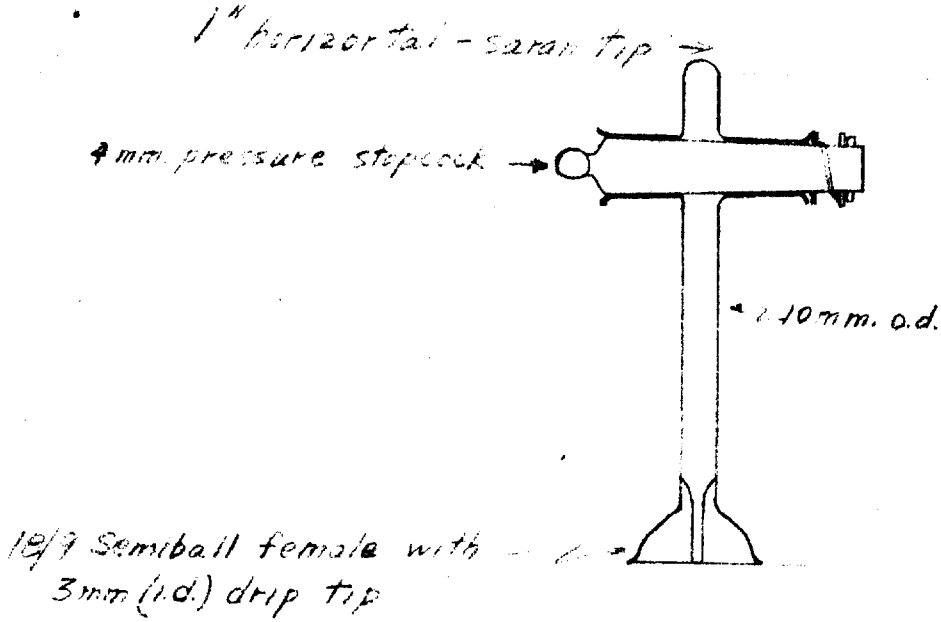

UNCLASSIFIED

4-11-45 ACD

APPROVED FOR PUBLIC RELEASE

APPROVED FOR PUBLIC RELEASE

UNCLASSIFIED

ETHER RESERVOIR
PART No. 2341
PYREX GLASS

UNCLASSIFIED

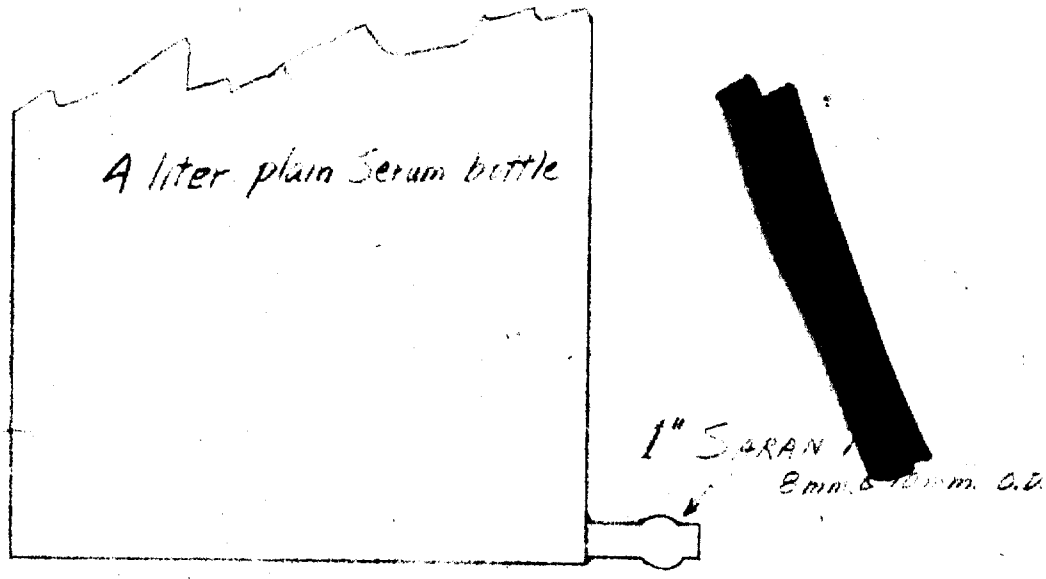

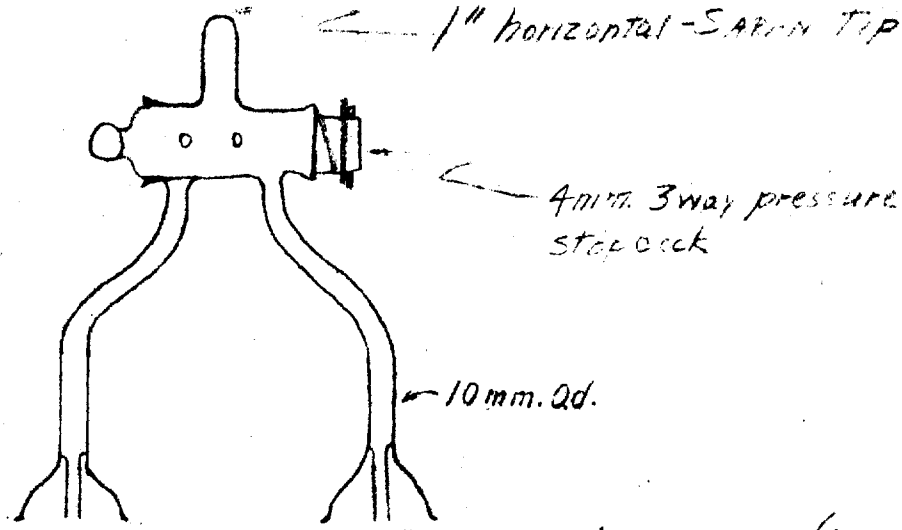

18/9 Semiball (female)
with 3mm. (I.D.) Stopper

UNCLASSIFIED

9-19-45 JCB

APPROVED FOR PUBLIC RELEASE

APPROVED FOR PUBLIC RELEASE

SARAN ADAPTERS

PYREX GLASS

PART No. 2350-A-B-C-D

UNCLASSIFIED

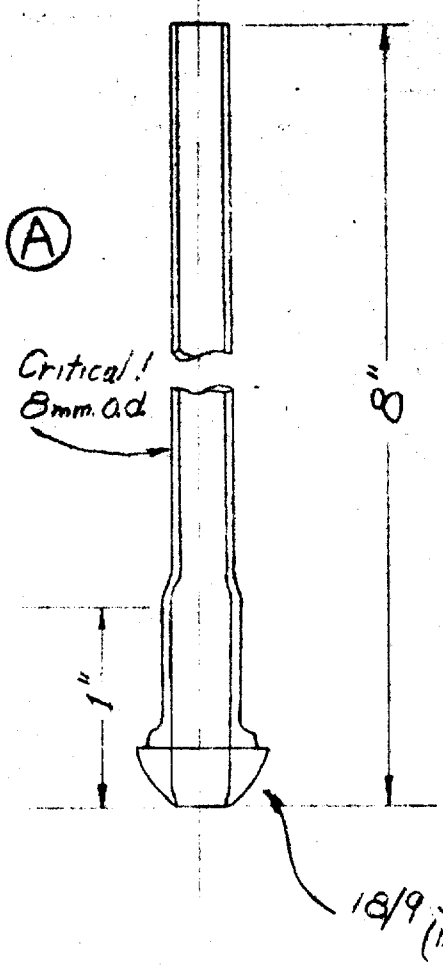

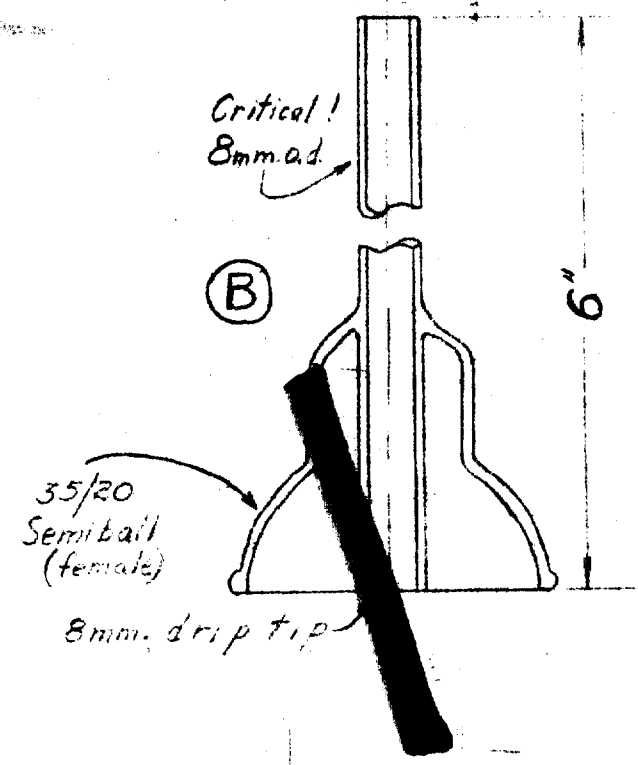

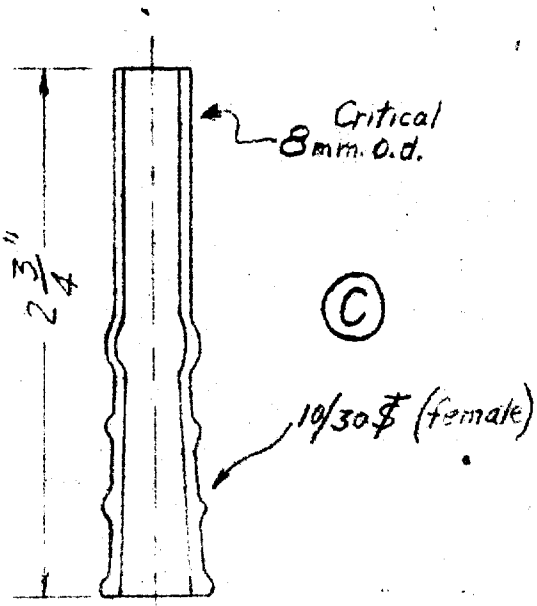

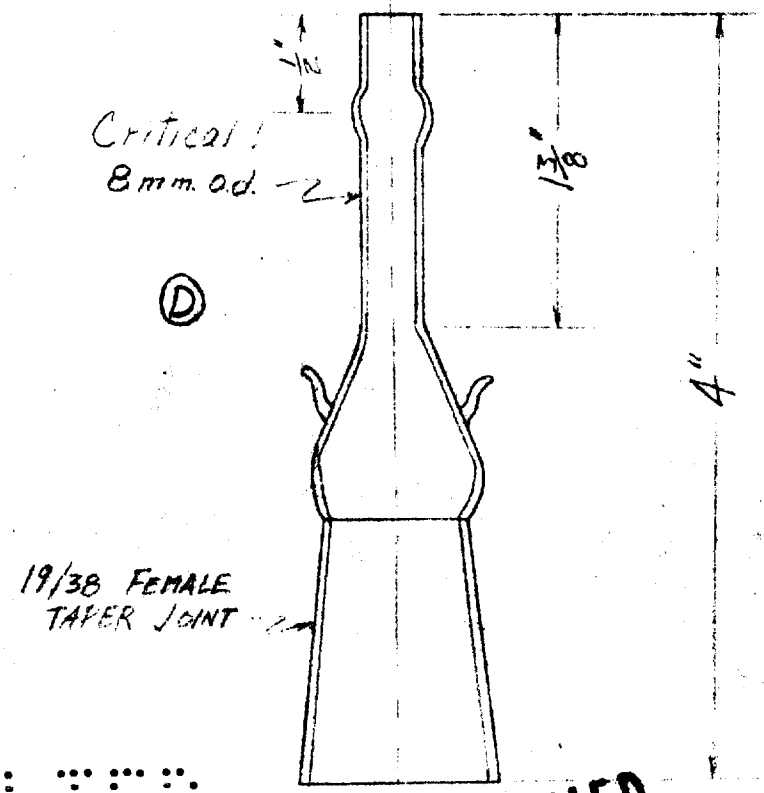

UNCLASSIFIED

UNCLASSIFIED

9-19-45 ACK

APPROVED FOR PUBLIC RELEASE

APPROVED FOR PUBLIC RELEASE

UNCLASSIFIED

Condenser Return Tube
Part No. 2360
Purex Glass
One Req'd.

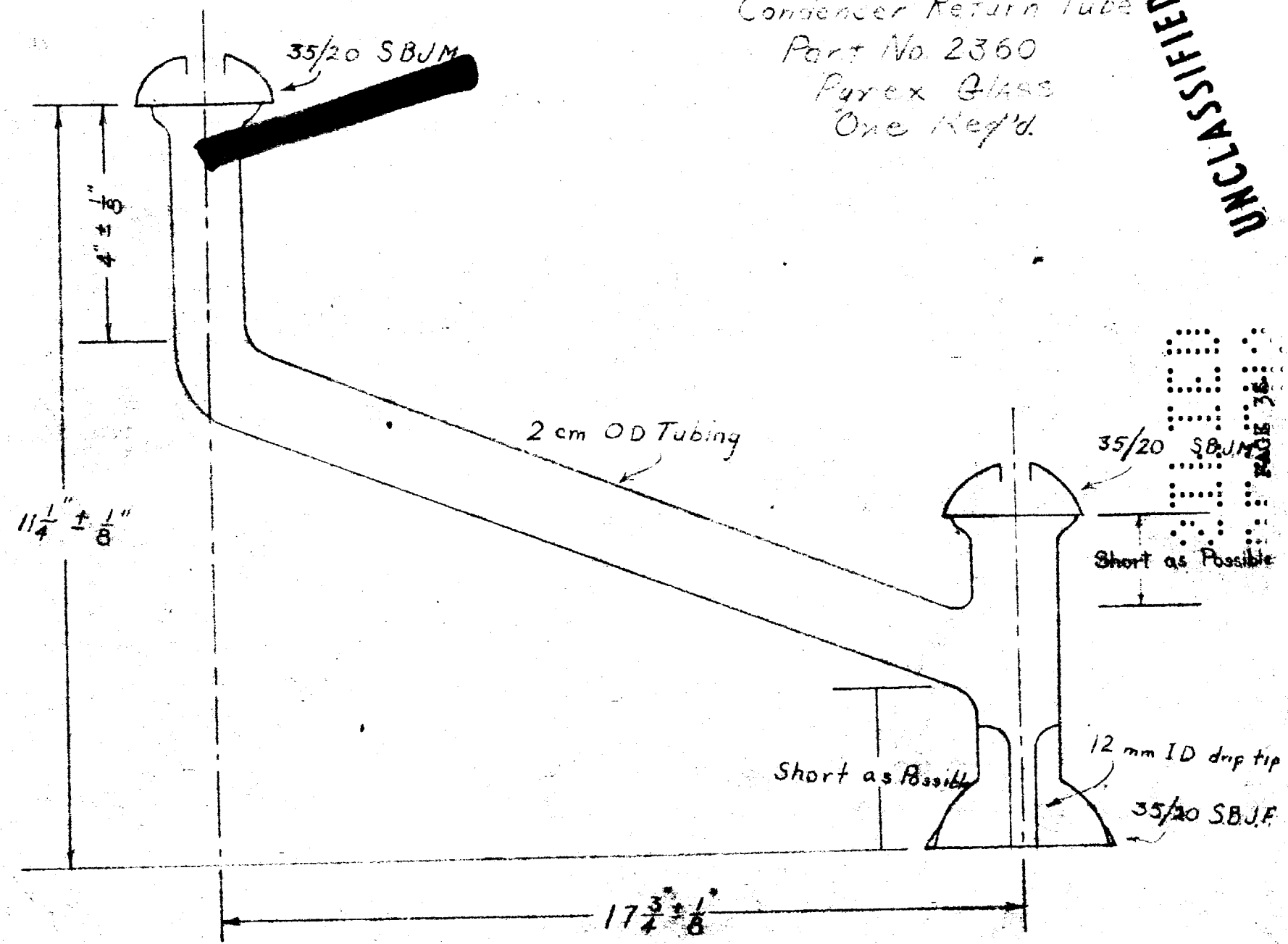

UNCLASSIFIED

PAGE 36

APPROVED FOR PUBLIC RELEASE

APPROVED FOR PUBLIC RELEASE

UNCLASSIFIED

Ether Vapor Safety Tube
Part No. 2370
Pyrex Glass
One Req'd.

UNCLASSIFIED

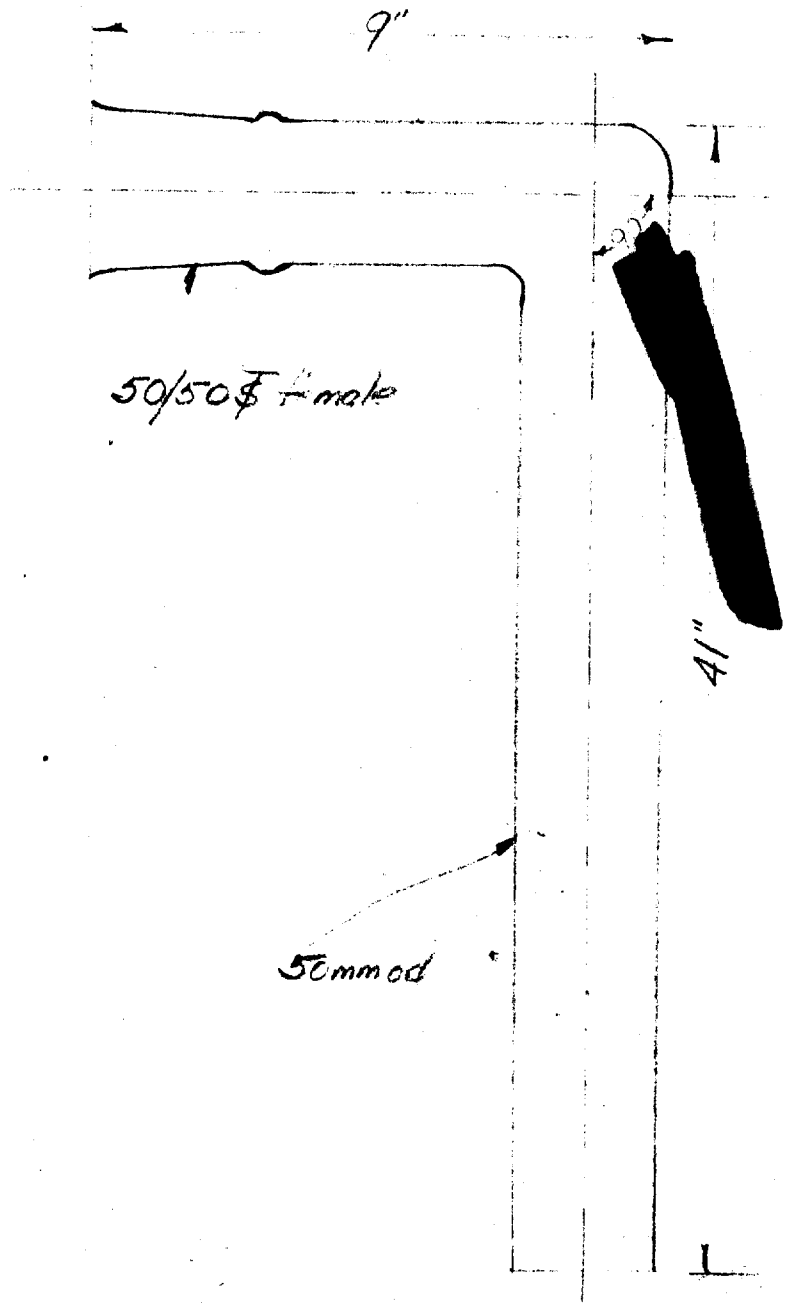

UNCLASSIFIED

UNCLASSIFIED

APPROVED FOR PUBLIC RELEASE

APPROVED FOR PUBLIC RELEASE

Sodium Hydroxide Trap
Part No. 2410

UNCLASSIFIED

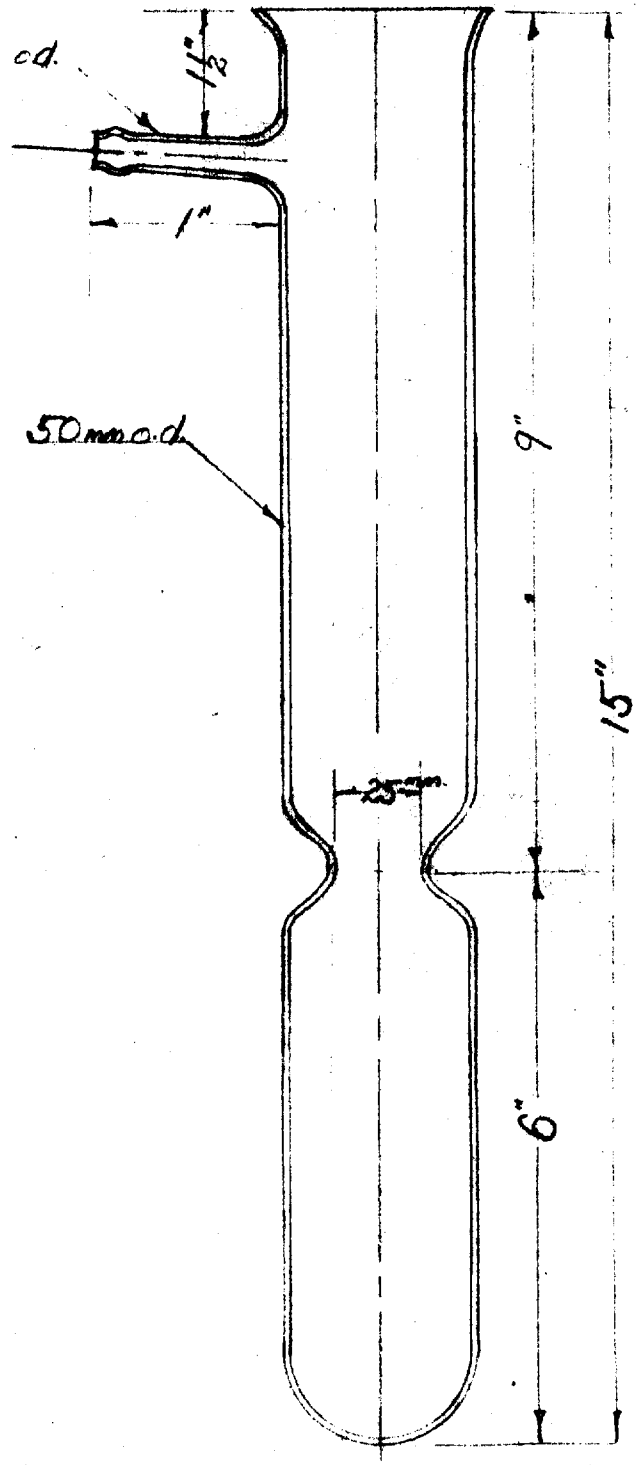

Material: Pyrex
3 per Apparatus

UNCLASSIFIED

Scale ½" = 1"

CHK DEC
4/24/45

APPROVED FOR PUBLIC RELEASE

APPROVED FOR PUBLIC RELEASE

UNCLASSIFIED

Spray Trap
Part No. 2420

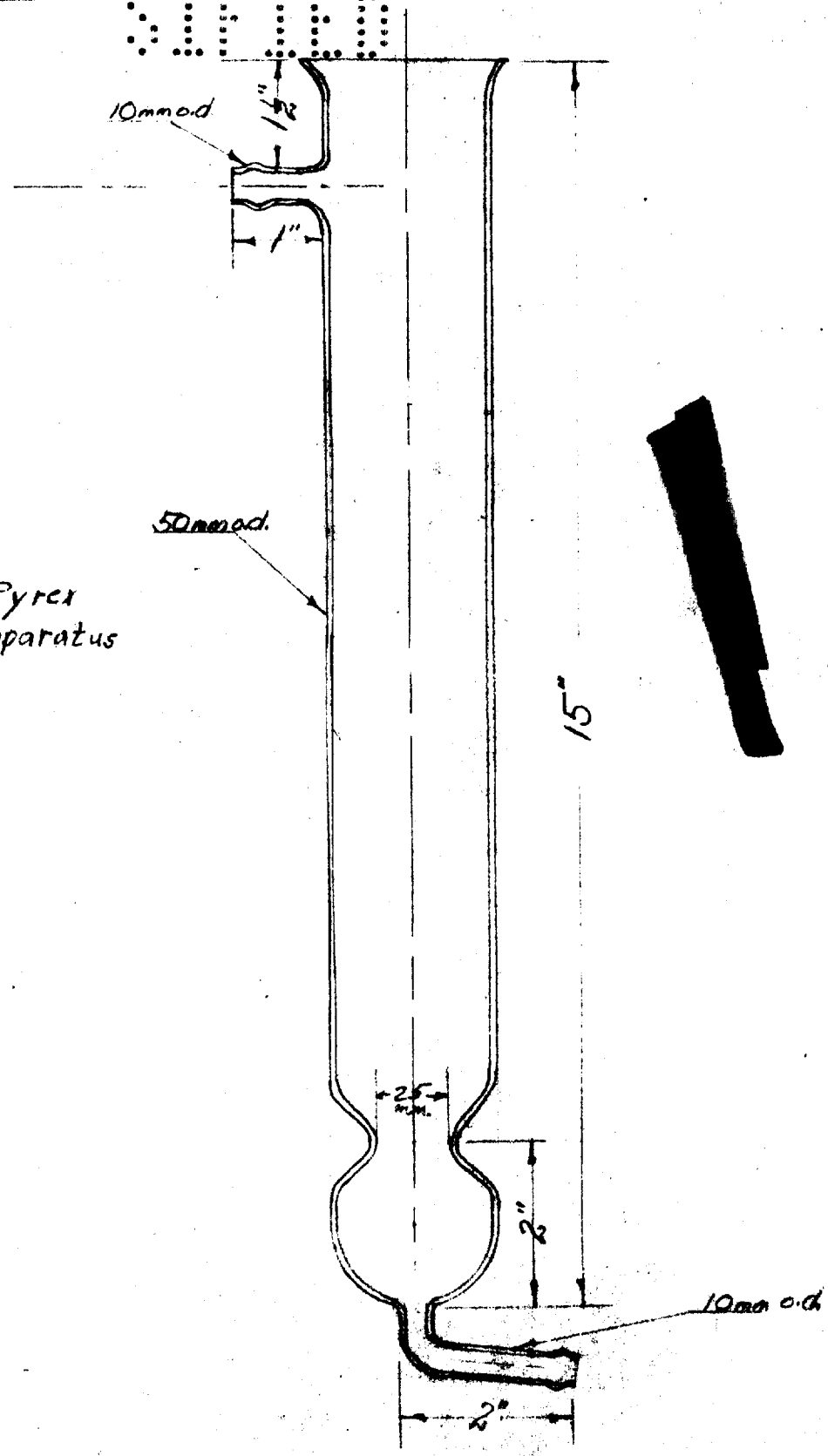

Material: Pyrex
3 per Apparatus

[redacted]

Scale: 1/2" = 1"

UNCLASSIFIED

D

Checked D.E.C. 4/24/45

APPROVED FOR PUBLIC RELEASE

APPROVED FOR PUBLIC RELEASE

Kjeldahl Trap
Part No 2430

UNCLASSIFIED

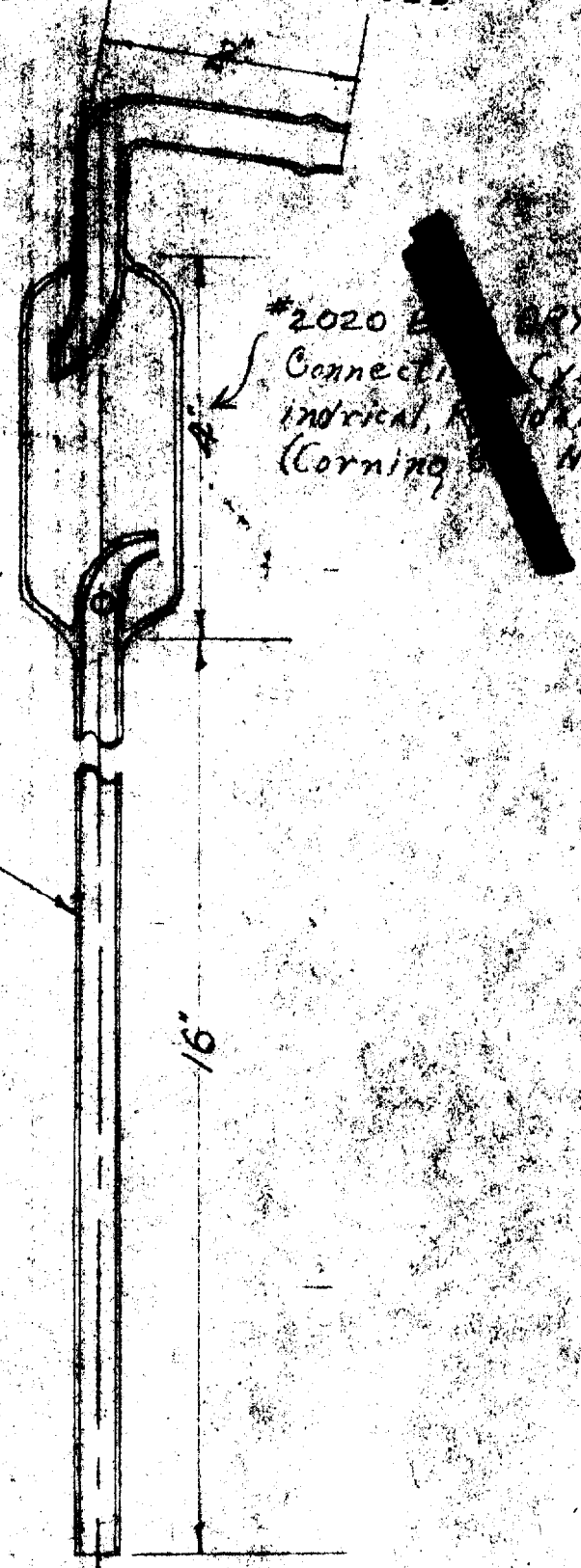

Material: Pyrex
3 per Apparatus

UNCLASSIFIED

D

Scale ½" = 1"

APPROVED FOR PUBLIC RELEASE

D.S.C.
4/2/May 59

APPROVED FOR PUBLIC RELEASE

UNCLASSIFIED

BUBBLER TD
PART No. 2442

UNCLASSIFIED

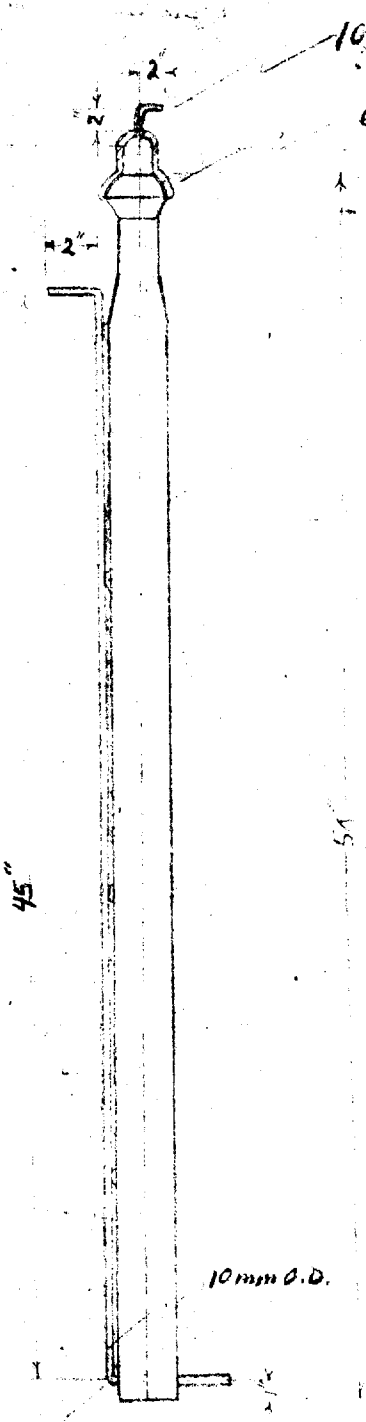

WIRE TUBE TO CYLINDER USE CORK SPACERS

64 mm O.D. GLASS TUBING

3/8 SPACE BETWEEN TUBES

1/2 SIZE

ATTACH TO OUTSIDE OF CYLINDER

MAKE BULGE (FOR RUBBER TUBE) TIPS ON ALL (10mm) TUBE EN

UNCLASSIFIED

APPROVED FOR PUBLIC RELEASE

APPROVED FOR PUBLIC RELEASE

UNCLASSIFIED

Liquid Drip Catchers
Drawing No. 6-4
Part No 2470.

UNCLASSIFIED

Material: Pyrex
4 Per Apparatus

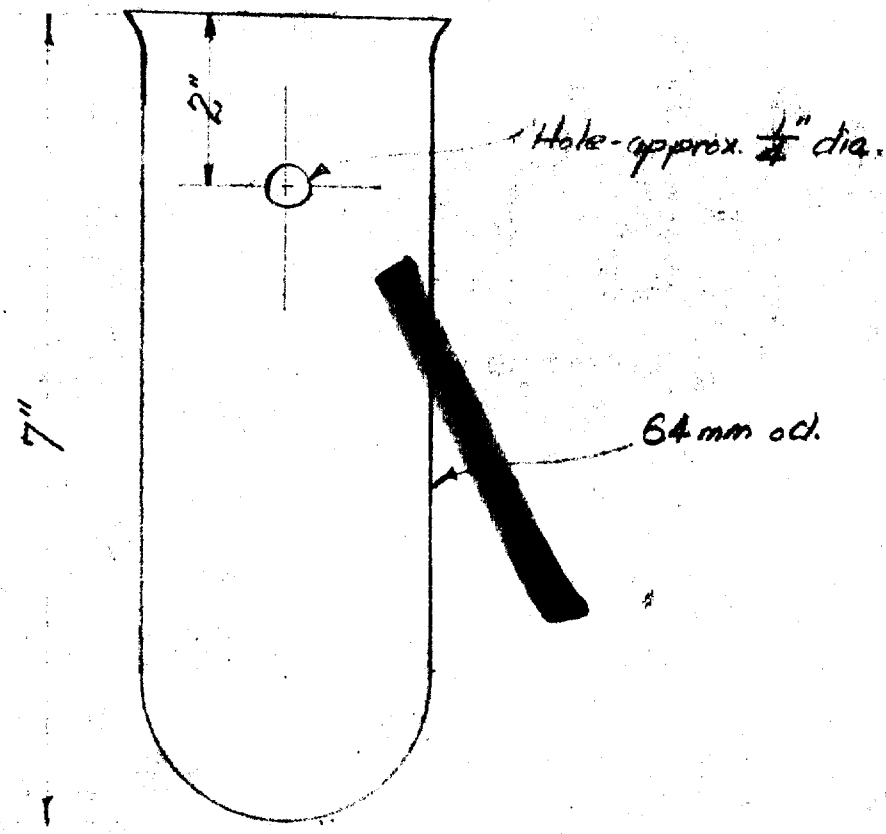

UNCLASSIFIED

UNCLASSIFIED

Scale 1/2" = 1"

D

41

APPROVED FOR PUBLIC RELEASE

APPROVED FOR PUBLIC RELEASE

CONDENSER & COIL FINDER

PART NOS. 2510 - 2520

FIRST PASS

UNCLASSIFIED

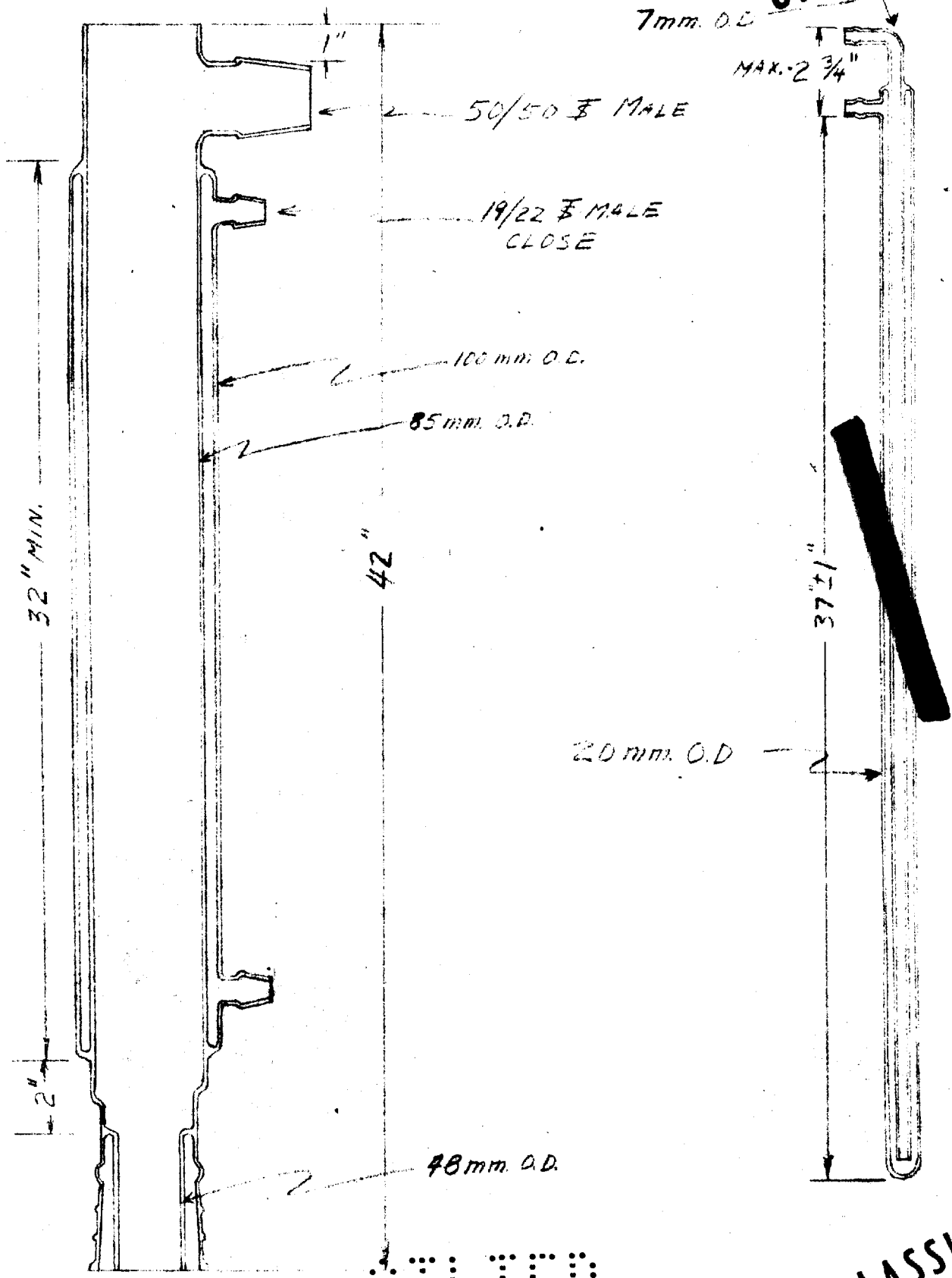

UNCLASSIFIED

9-45 ACB.

APPROVED FOR PUBLIC RELEASE

APPROVED FOR PUBLIC RELEASE

DECLASSIFIED

Liquid Vapor Tee
Part No. 2531
Pyrex Glass
1 Req'd

UNCLASSIFIED

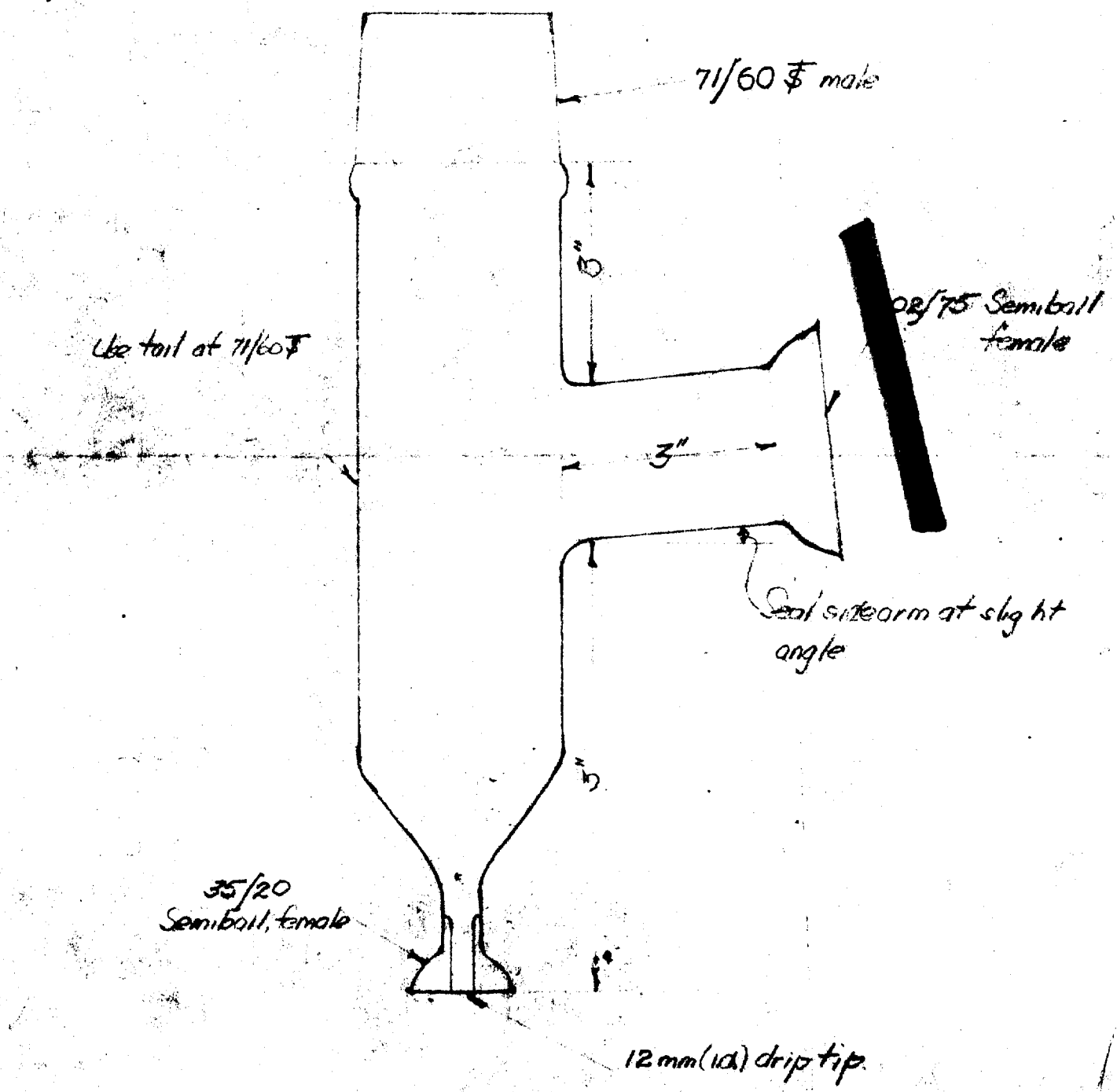

DECLASSIFIED

UNCLASSIFIED

Revised 4/23/45
Thos B.

APPROVED FOR PUBLIC RELEASE

APPROVED FOR PUBLIC RELEASE

UNCLASSIFIED

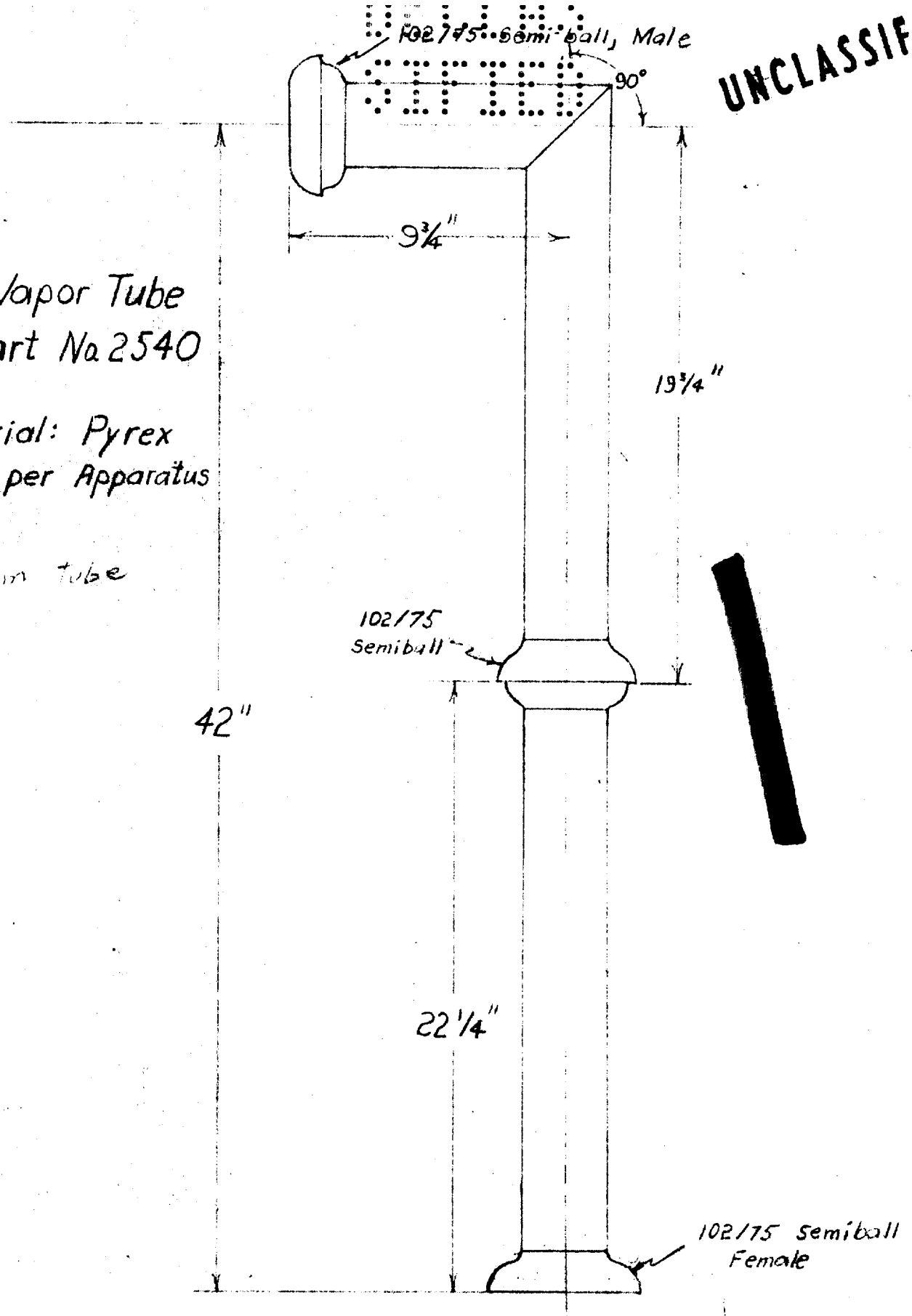

Et_2O Vapor Tube
Part No. 2540

Material: Pyrex
1 per Apparatus

80mm tube

D

Scale: 1" = 5"

Tolerance = ± 1/8" on all dimensions

UNCLASSIFIED

APPROVED FOR PUBLIC RELEASE

APPROVED FOR PUBLIC RELEASE

UNCLASSIFIED

UNCLASSIFIED

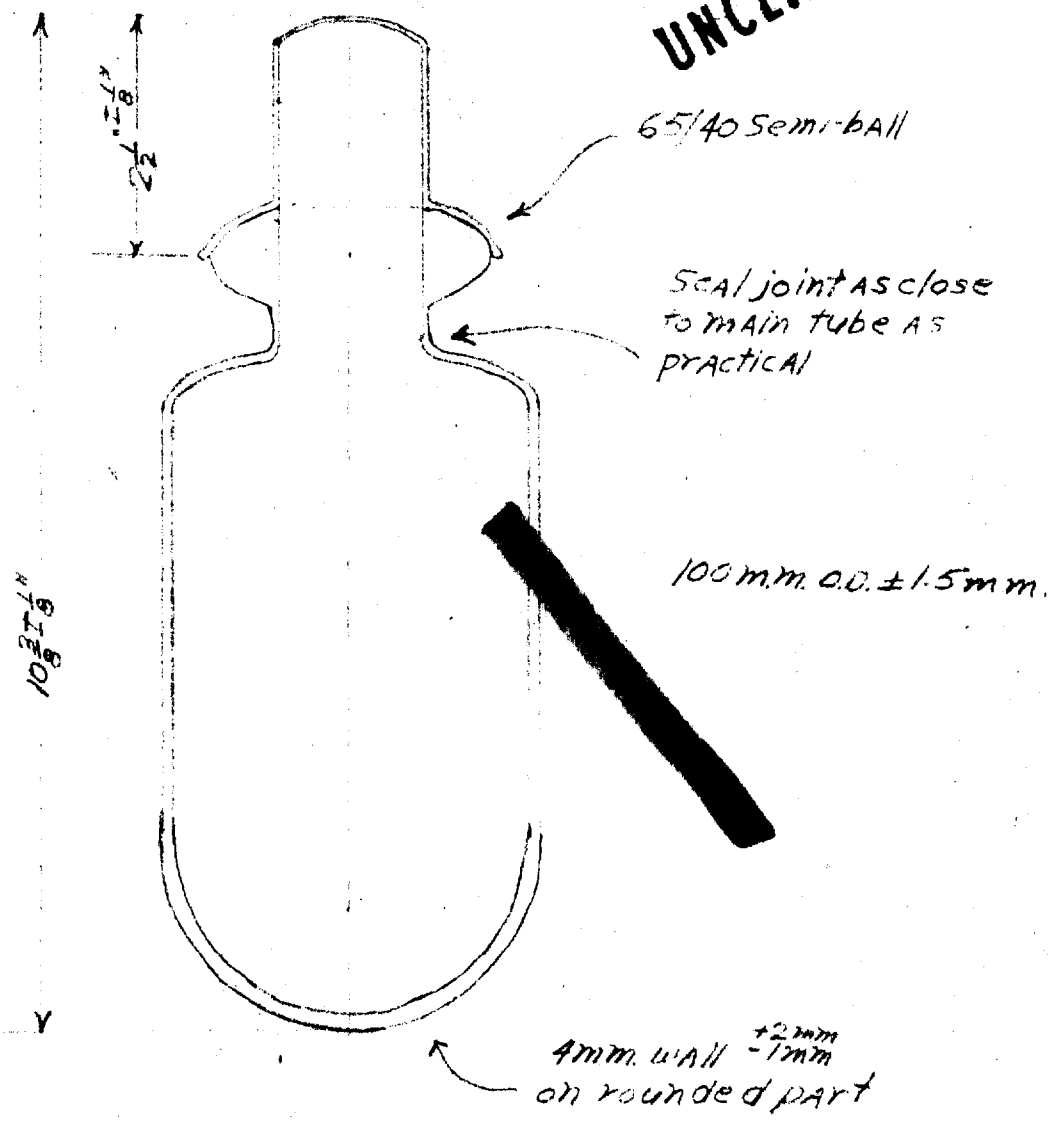

SMALL STORAGE BOTTLE
Part. No. 2610
Pyrex Glass
Four Parts per Apparatus

UNCLASSIFIED

UNCLASSIFIED

4-23-45 Redimension
JBB

APPROVED FOR PUBLIC RELEASE

APPROVED FOR PUBLIC RELEASE

UNCLASSIFIED

UNCLASSIFIED

Transfer Bottle
Drwg. No. 2630

Pyrex Glass
Four Parts per
Apparatus

65/40
Semiball

2"

This dimension
critical!

$\frac{1}{8}$"

$\frac{7}{8}$"

$\frac{1}{4}$"

$\frac{1}{2}$"

$\frac{1}{4}$"

1 liter pyrex r.b. flask

UNCLASSIFIED

UNCLASSIFIED

4-23-45 Redimension
JBA

APPROVED FOR PUBLIC RELEASE

APPROVED FOR PUBLIC RELEASE

UNCLASSIFIED

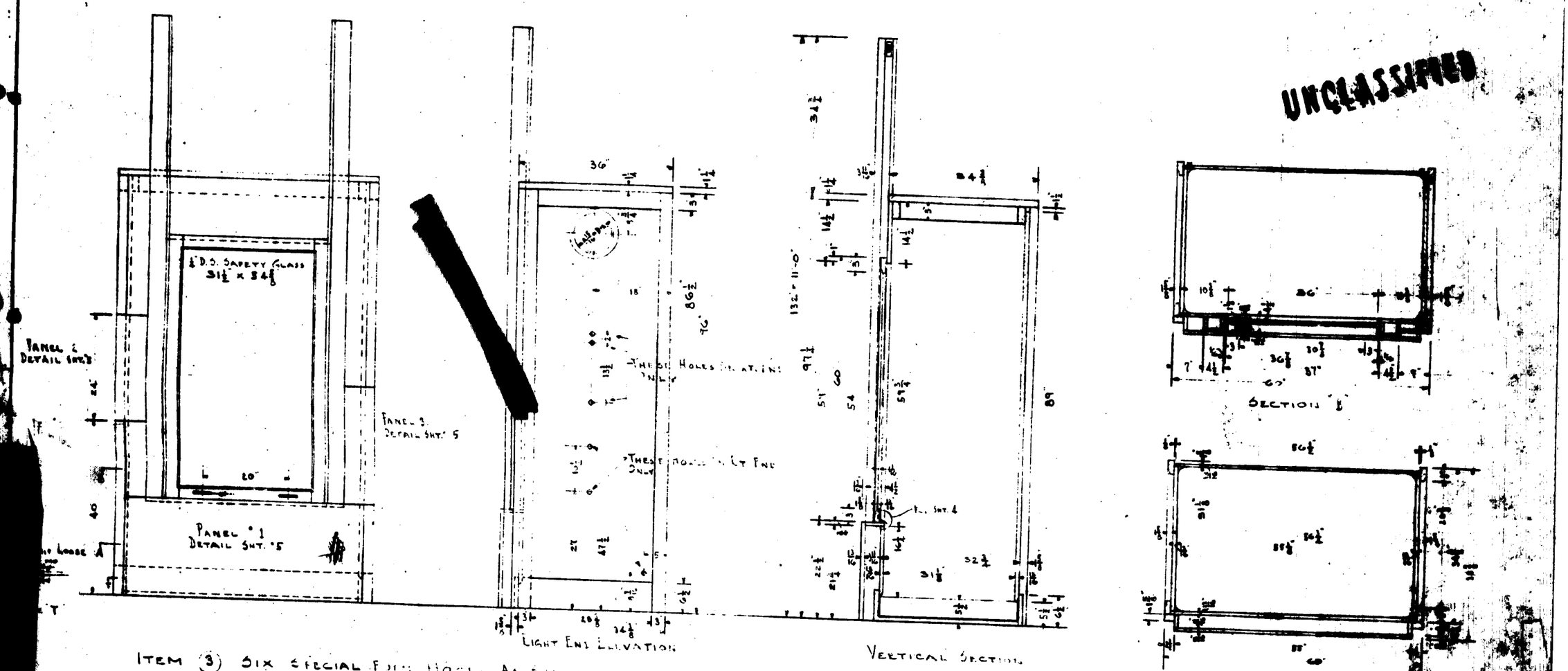

ITEM (3) SIX SPECIAL FUEL HOLES AS SHOWN

FINISH NOTE:
FINISH INTERIOR HIGH GLOSS WHITE ENAMEL
FINISH EXTERIOR GRAY

NOTE:
THESE HOLES TO BE SHIPPED KNOCKED OUT. INTO FRONT ASSEMBLY, TOP, TOP TRAVEL, END PLATE & BOTTOM PAN, & SACK.

UNCLASSIFIED

KEWAUNEE MANUFACTURING COMPANY
Adrian, Michigan

W-3338

APPROVED FOR PUBLIC RELEASE

APPROVED FOR PUBLIC RELEASE

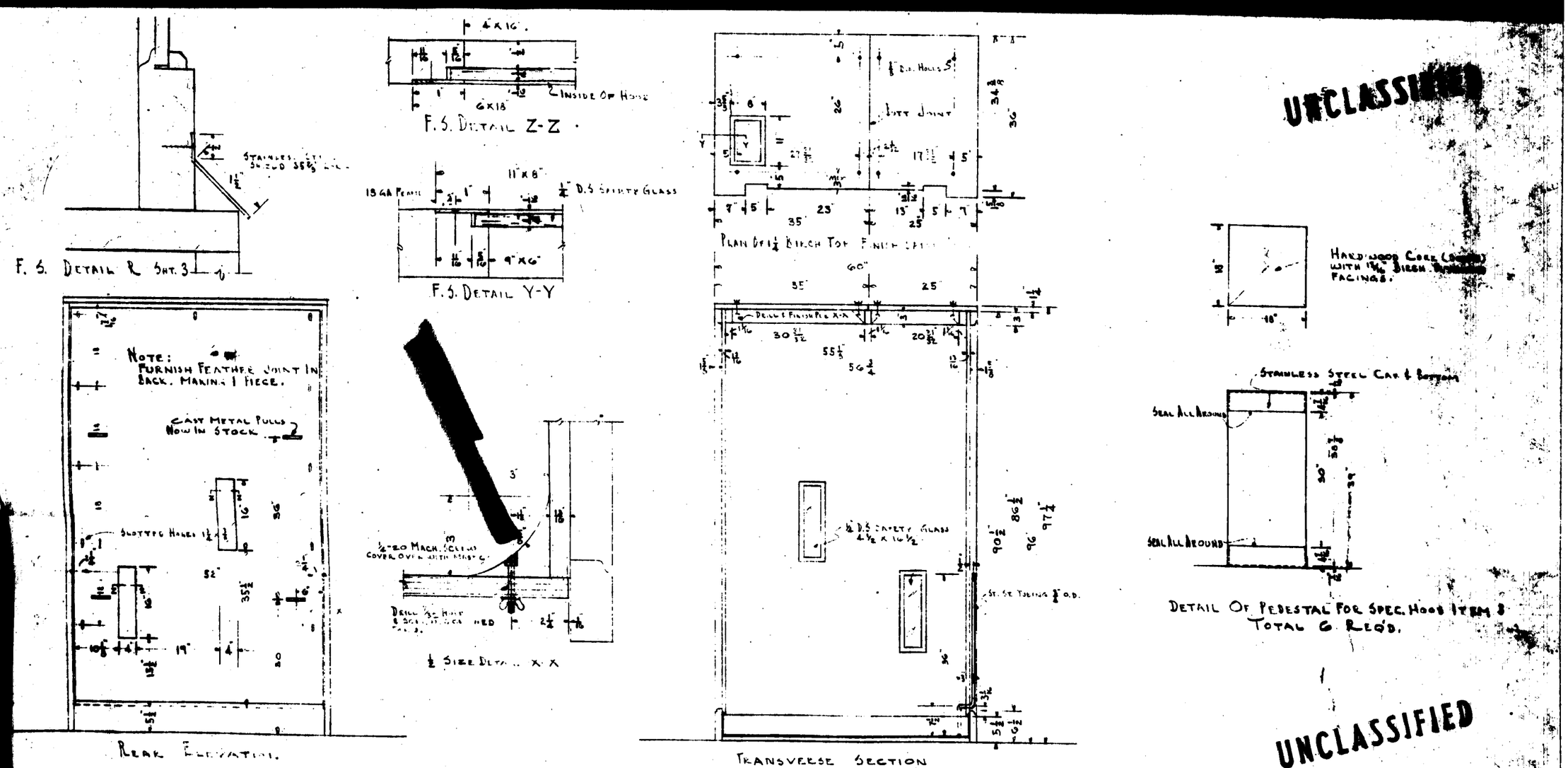

Blue Prints	Revisions	Customer	Order Number
			U) 3330

KEWAUNEE MANUFACTURING COMPANY
Adrian, Michigan

APPROVED FOR PUBLIC RELEASE

APPROVED FOR PUBLIC RELEASE

UNCLASSIFIED

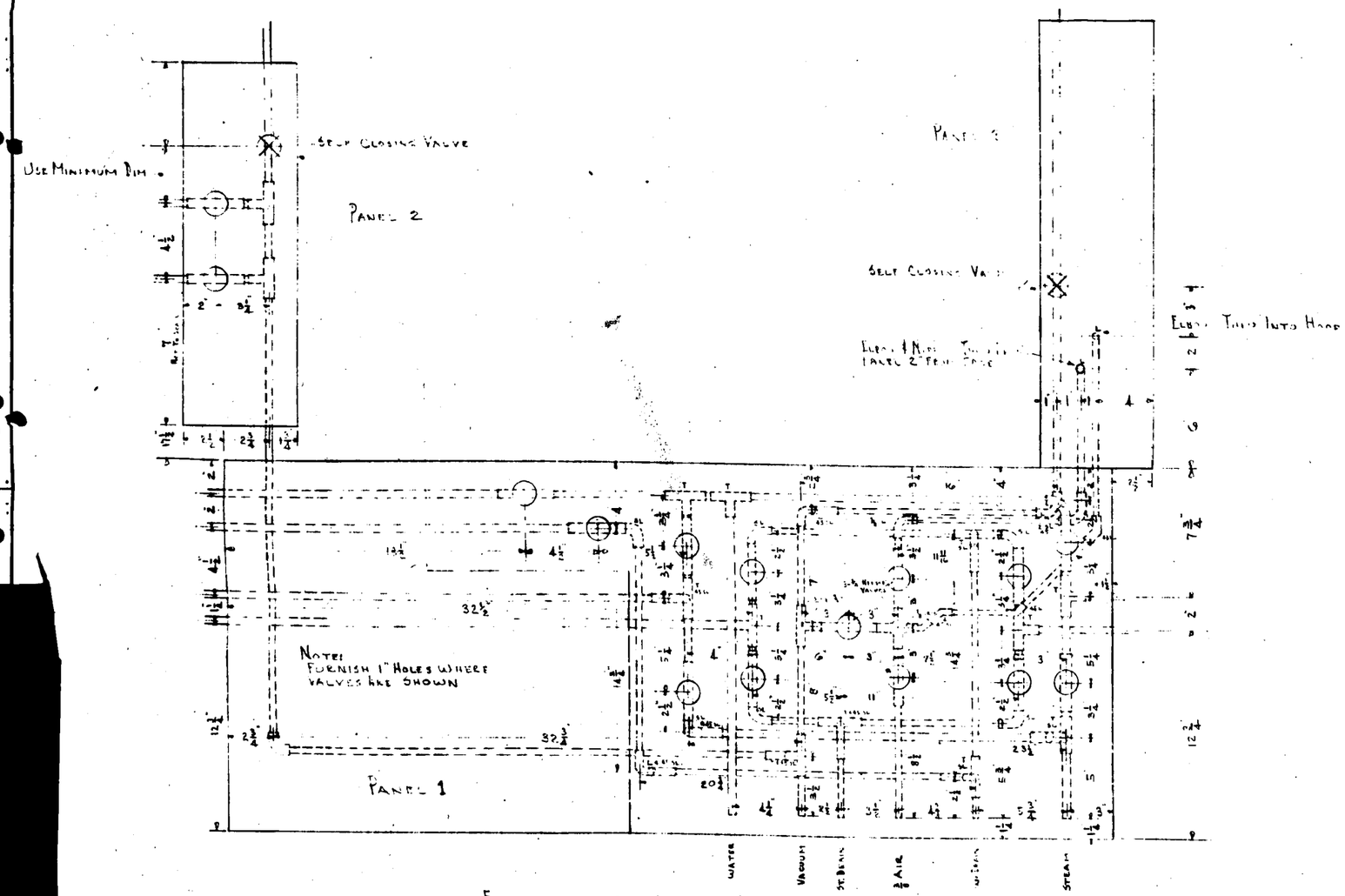

Elevation Of Service Panels

UNCLASSIFIED

Planning	Blue Prints						Revisions					
Fixtures	Printed	Copies	Purpose	Printed	Copied	Purpose	Revised	Date	Check	Revised	Date	Check
Hardware	1-1-41	3	Fac.									

KEWAUNEE MANUFACTURING COMPANY
Adrian, Michigan

Customer	Order Number	Drawn	By	Date	Scale
	(U)-3338	Check	Miller	1-12-45	3 in. = 1 ft.
		Detail			
		Check			

APPROVED FOR PUBLIC RELEASE

APPROVED FOR PUBLIC RELEASE

UNCLASSIFIED

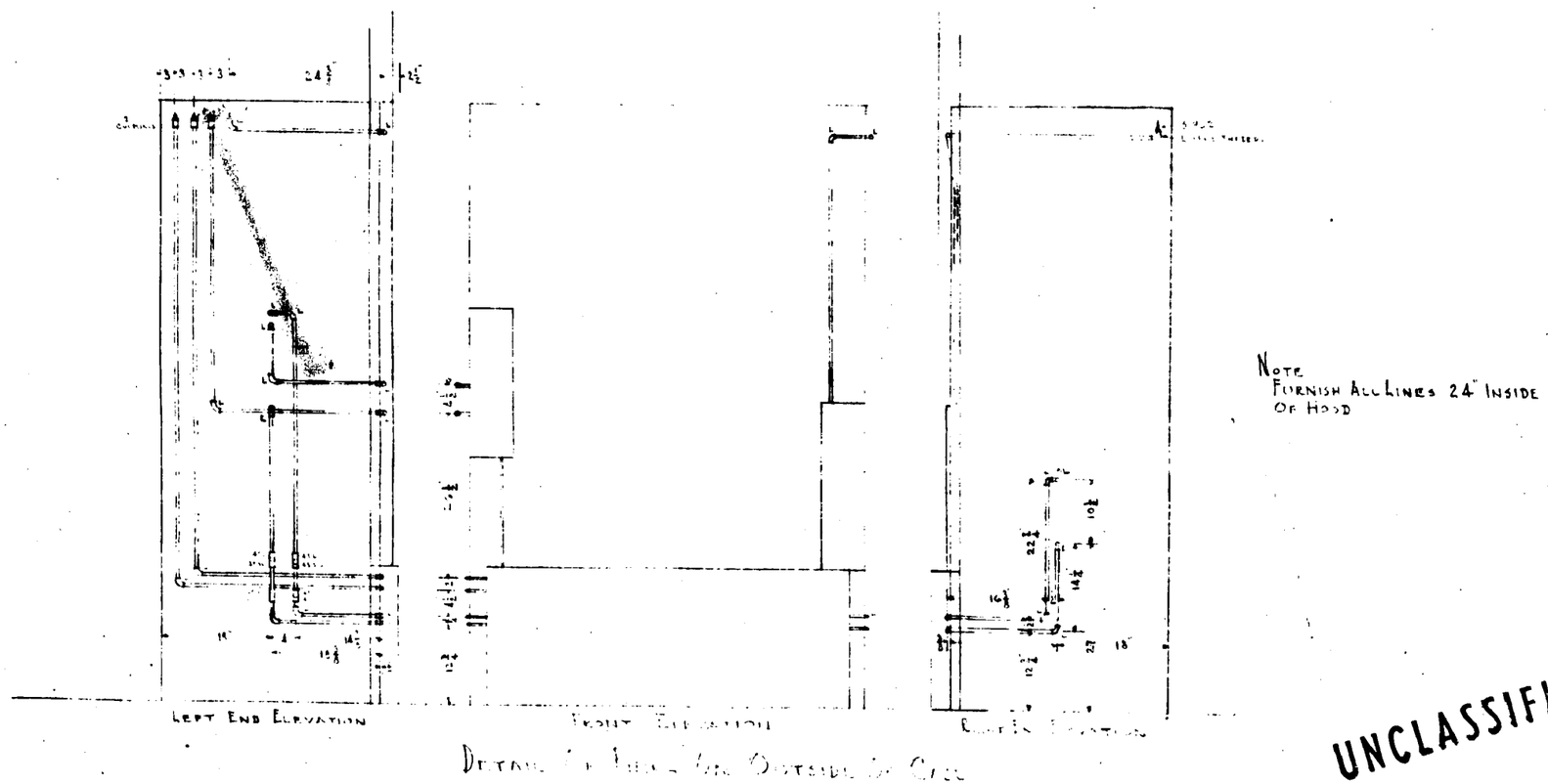

UNCLASSIFIED

PAGE 53

PLUMBING FIXTURES		BLUE PRINTS						REVISIONS					
HARDWARE		PRINTED	COPIES	PURPOSE	PRINTED	COPIES	PURPOSE	REVISED	DATE	CHECK	REVISED	DATE	CHECK

KEWAUNEE MANUFACTURING COMPANY
Adrian, Michigan

CUSTOMER	ORDER NUMBER	DRAWN	BY	DATE	SCALE
	60-3338	CHECK			1 IN. = 1 FT.
		DETAIL			
		CHECK			

APPROVED FOR PUBLIC RELEASE

APPROVED FOR PUBLIC RELEASE

UNCLASSIFIED

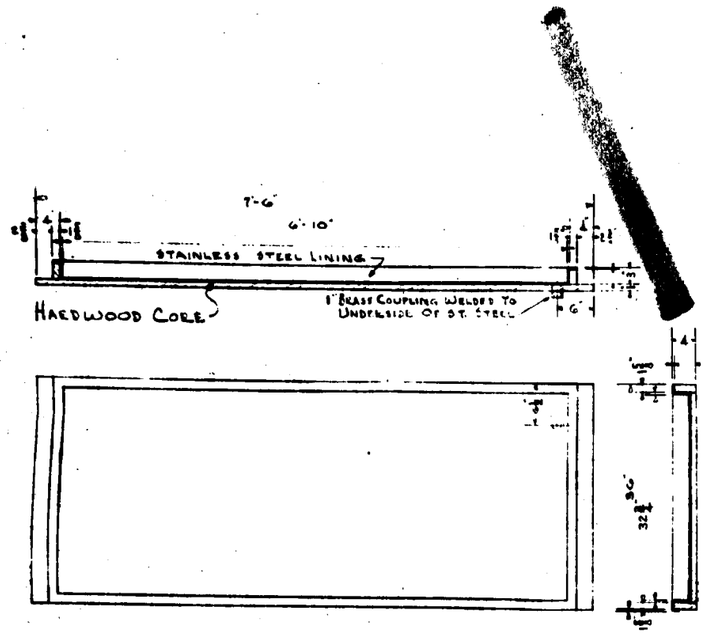

DETAIL OF STAINLESS STEEL OVER WOOD CORE TOP
TOTAL 3 REQ'D. FOR TYPE RC & FC HOODS

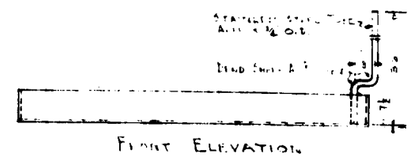

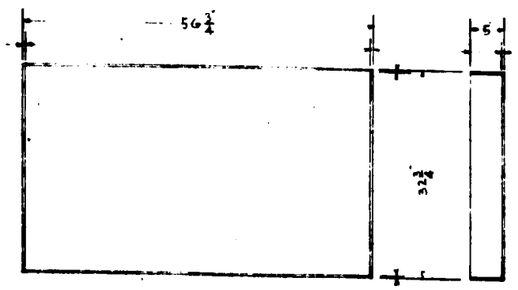

DETAIL OF STAINLESS STEEL TUB
TOTAL 6 REQ'D. FOR SPEC. HOOD

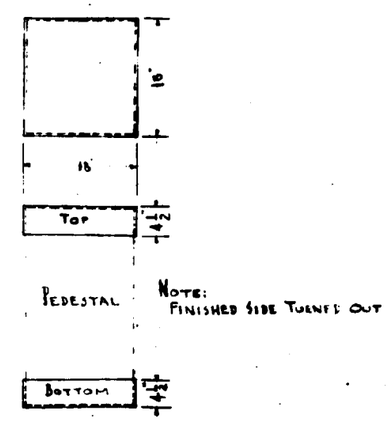

DETAIL OF STAINLESS STEEL PEDESTAL
TOTAL 6 ASSEMBLIES REQ'D.

UNCLASSIFIED

PLANNED FEATURES	BLUE PRINTS	REVISIONS	CUSTOMER	ORDER NUMBER	DRAWN	BY	DATE	SCALE
					CHECKED			
					APPROVED			

KEWAUNEE MANUFACTURING COMPANY
Adrian, Michigan

APPROVED FOR PUBLIC RELEASE

APPROVED FOR PUBLIC RELEASE

NITRIC BOTTLE HOLDER

3410-A

UNCLASSIFIED

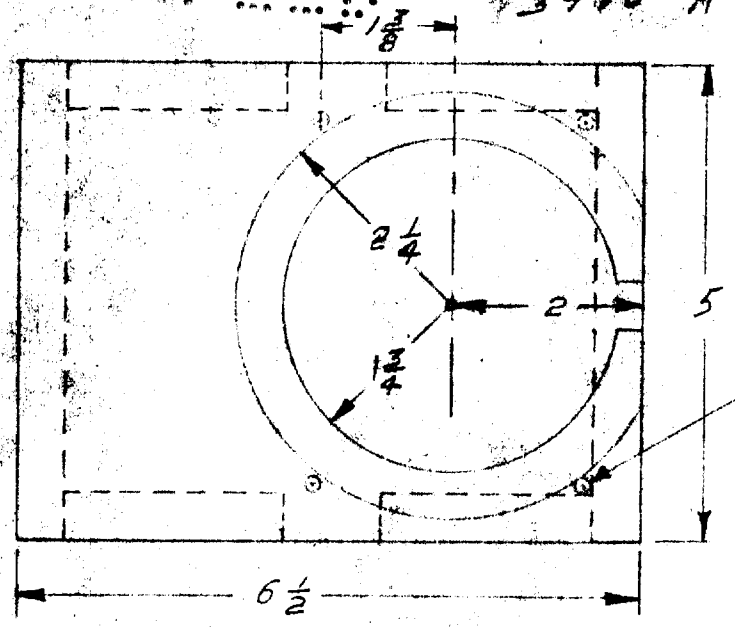

DRILL [redacted] HOLES 1/4 DIA. LOCATED [redacted] 2 3/4 DIA. CIRCLE [redacted]

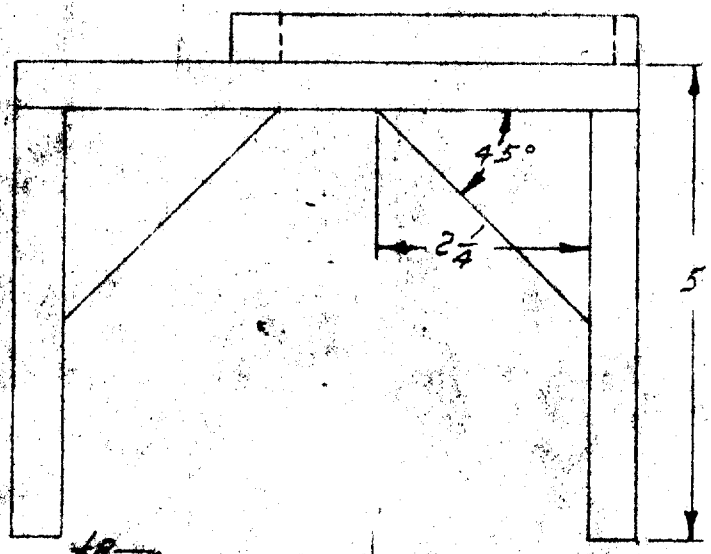

ALL PARTS MADE OF 1/2" PLYWOOD

ALSO REQ'D 4 PCS. 1/4 ROUND BRASS ROD 8" LONG THD 2" ON BOTH ENDS WITH 1/4-20 DIE. (3410-B)

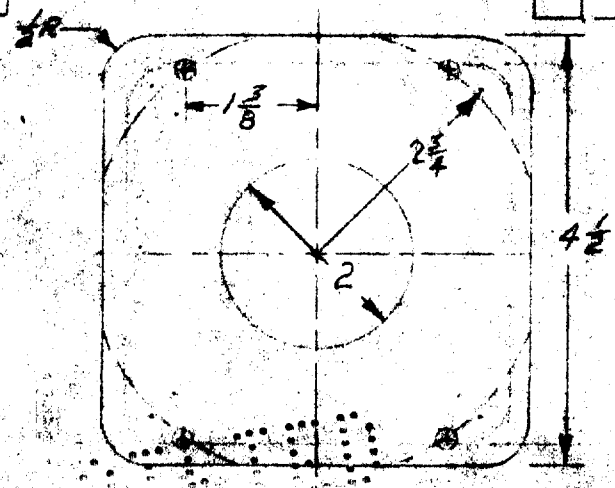

UNCLASSIFIED

SCALE-HALF

APPROVED FOR PUBLIC RELEASE

APPROVED FOR PUBLIC RELEASE

UNCLASSIFIED

Ether Bottle holder

3420-A

UNCLASSIFIED

4 Holes drill 1/4" Holes lie at corners of a 6" square whose center is concentric with center of circles.

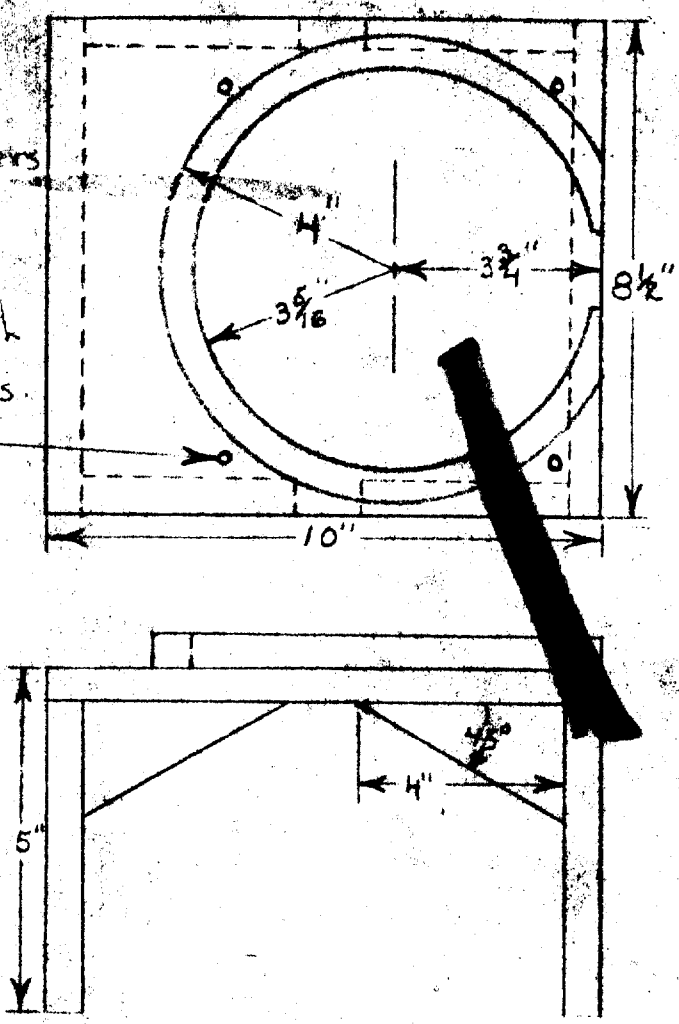

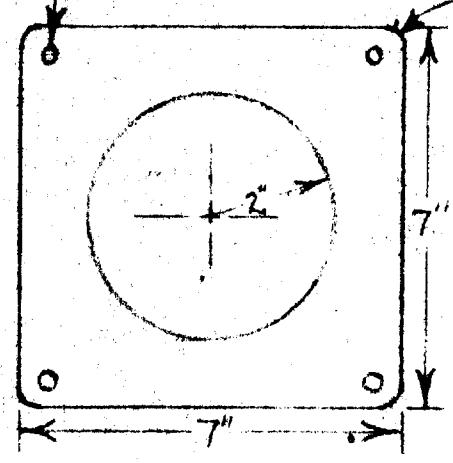

Round corners ~1/2" radius

All parts made of 1/2" plyo

Also req'd 4 pcs. 1/4" round brass rod 4" long thd 3" on both ends with 1/4-20 die. (3420-B)

UNCLASSIFIED

5035

APPROVED FOR PUBLIC RELEASE

APPROVED FOR PUBLIC RELEASE

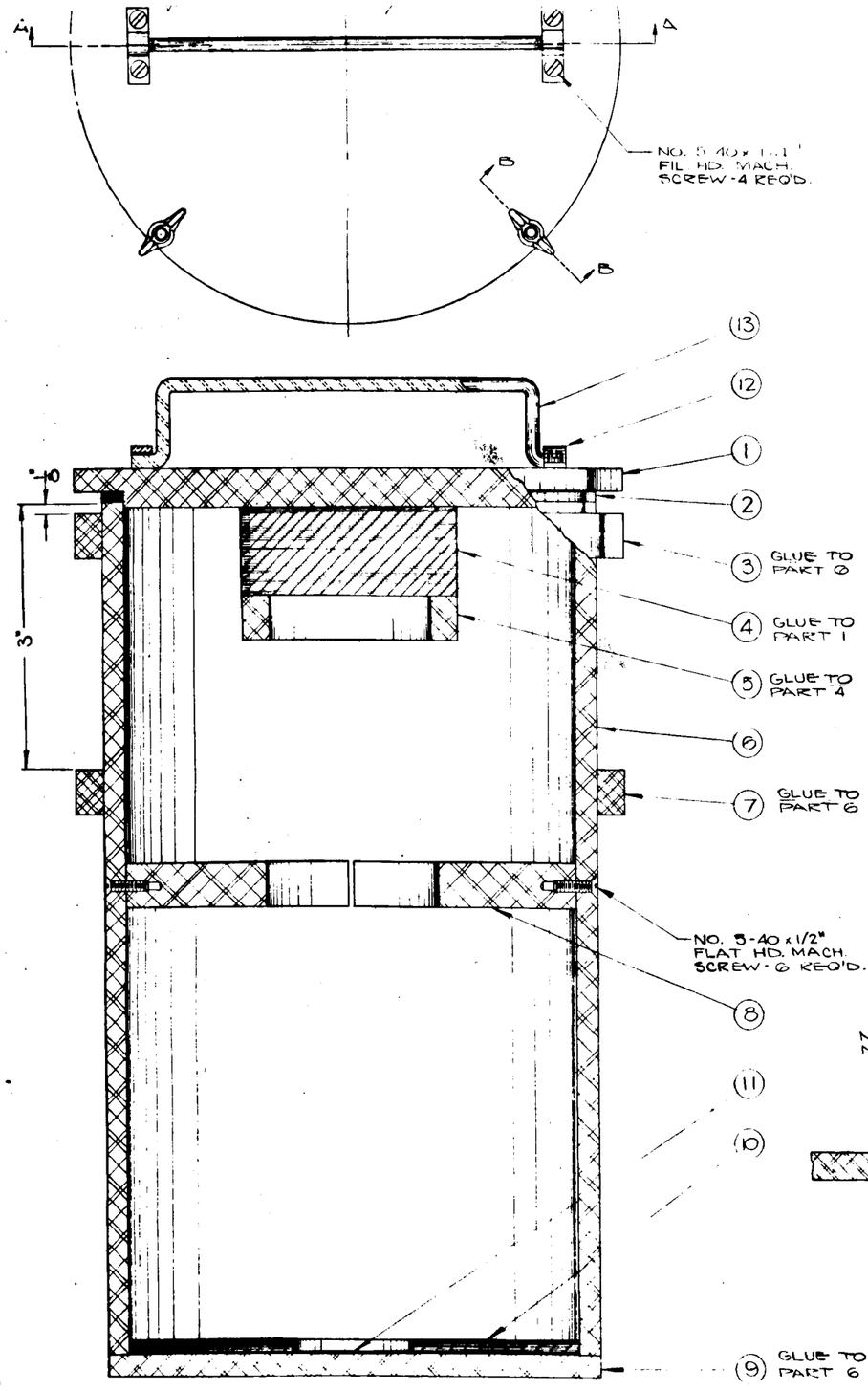

ASSEMBLY
SECTION A-A - 1" = 1"

NOTE: ASSEMBLY MUST BE WATER-TIGHT

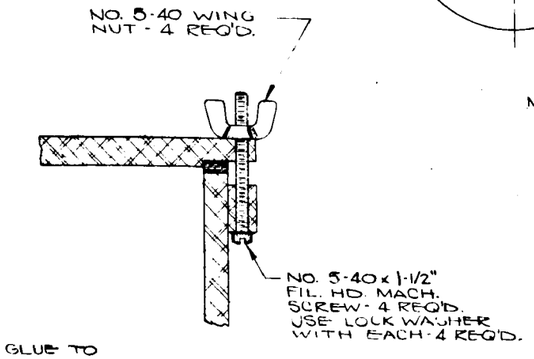

SECTION B-B
1" = 1"

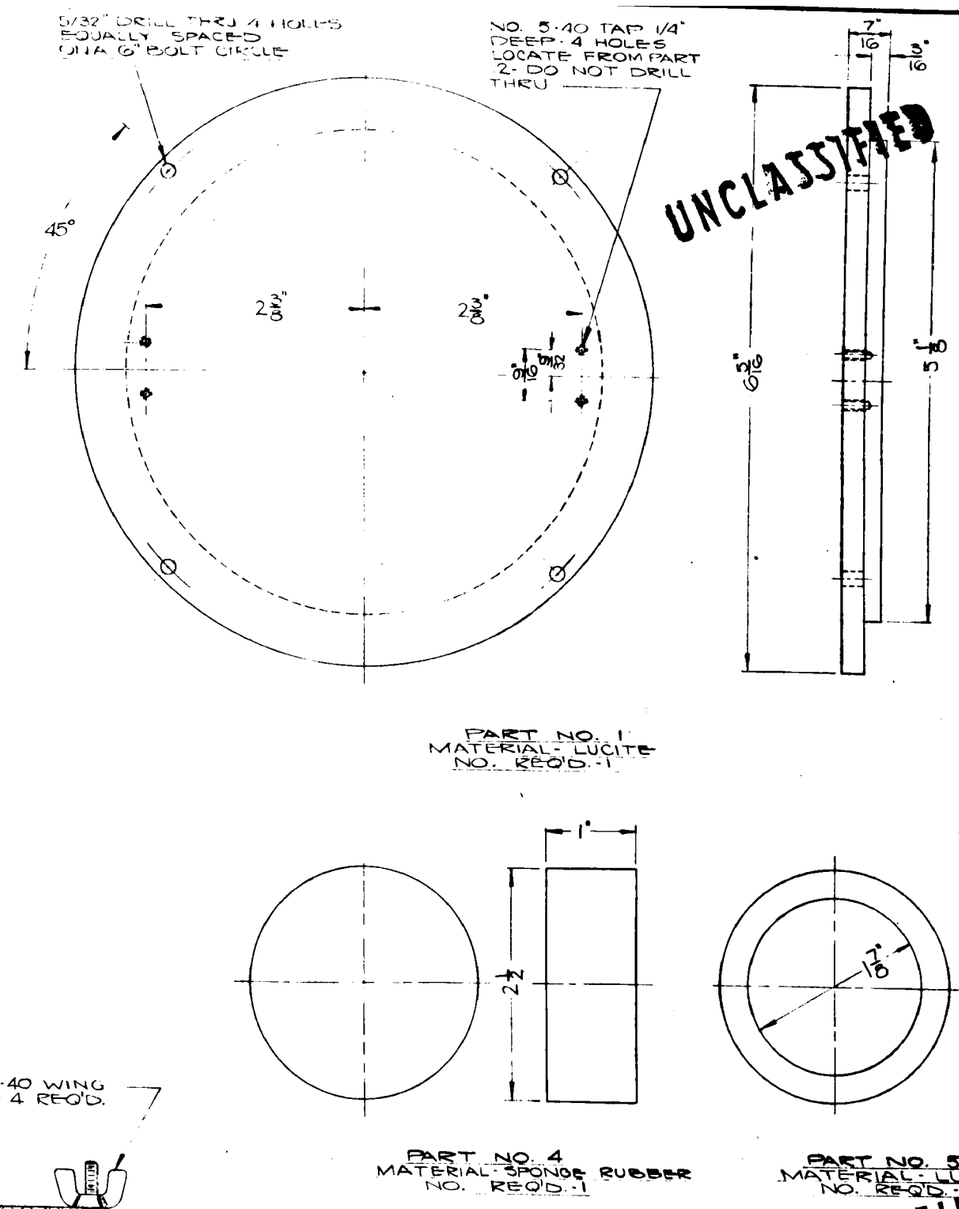

UNCLASSIFIED

UNCLASSIFIED

		APPROVED FOR CONST.						
		CHIEF ENG.						
		PROJ. ENG.	R.J.H.	5-26-45				
		CHECKED	R.A.G.	5-26-45				
		DRAWN	R.K.W.	5-23-45				
GROUP REPR.	GROUP NO.	LAYOUT ON SECTION						
FINISHES GROUND / SMOOTH MACHINE / ROUGH MACHINE			INITIALS	DATE	REV. LTR.	CHANGED ITEM WAS	DATE	BY
TOLERANCES EXCEPT AS NOTED		CALC. WT.	#		ADDITIONAL SHEETS		SHEET SIZE C NO. 1A TOTAL 3	
FRACTIONAL ± 1/64; ANGLES ± 1/2°; SHEET METAL ± 1/32; DECIMALS		ACT. WT.	#					
		SUPERSEDES			MODEL OR TITLE: LUCITE CAN DP: 4	DRAWING NO. Y-5149	SCALE 1" = 1"	
		SUPERSEDED BY						

PAGE 57

APPROVED FOR PUBLIC RELEASE

APPROVED FOR PUBLIC RELEASE

UNCLASSIFIED

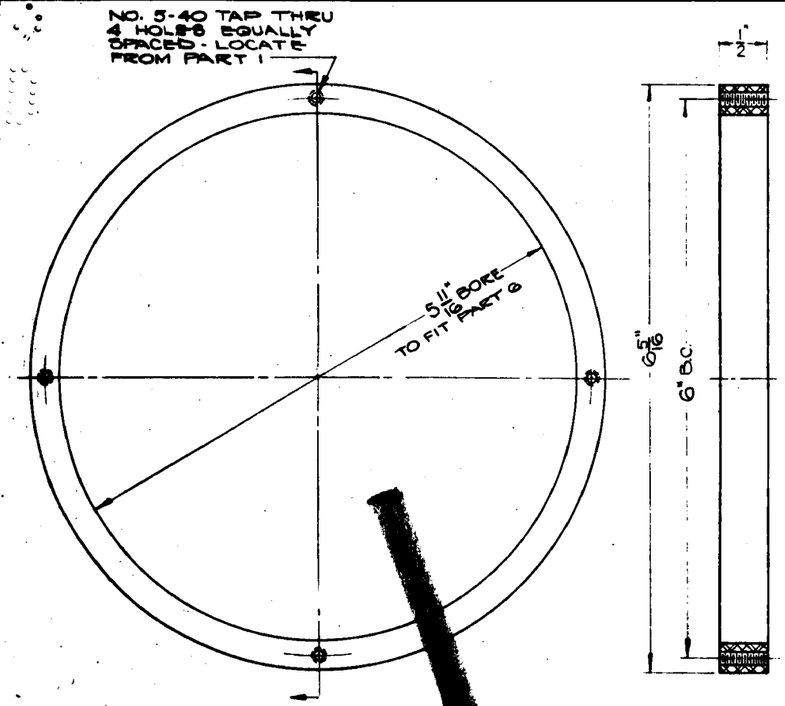

PART NO. 3
MATERIAL - LUCITE
NO. REQ'D - 1

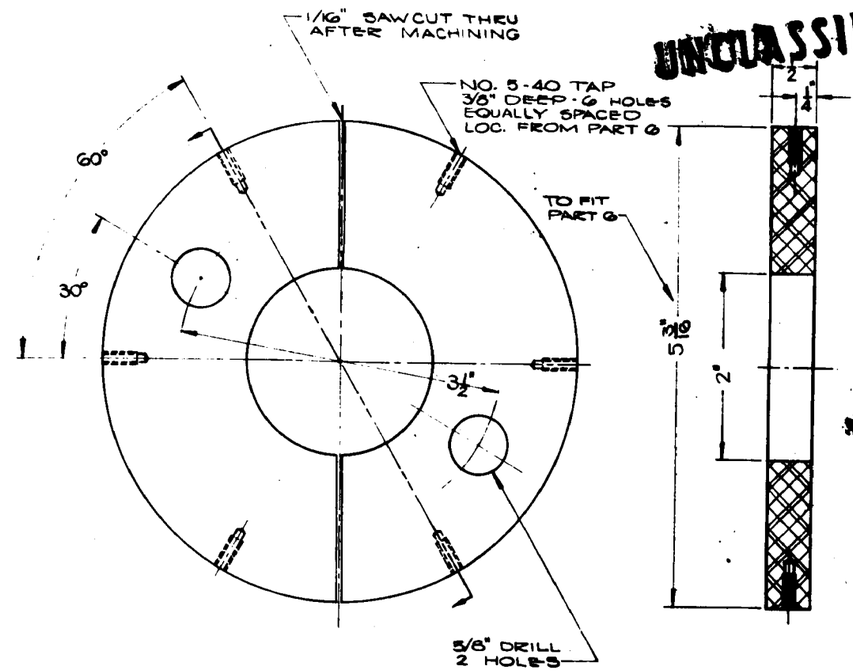

PART NO. 6
MATERIAL - LUCITE
NO. REQ'D. - 1

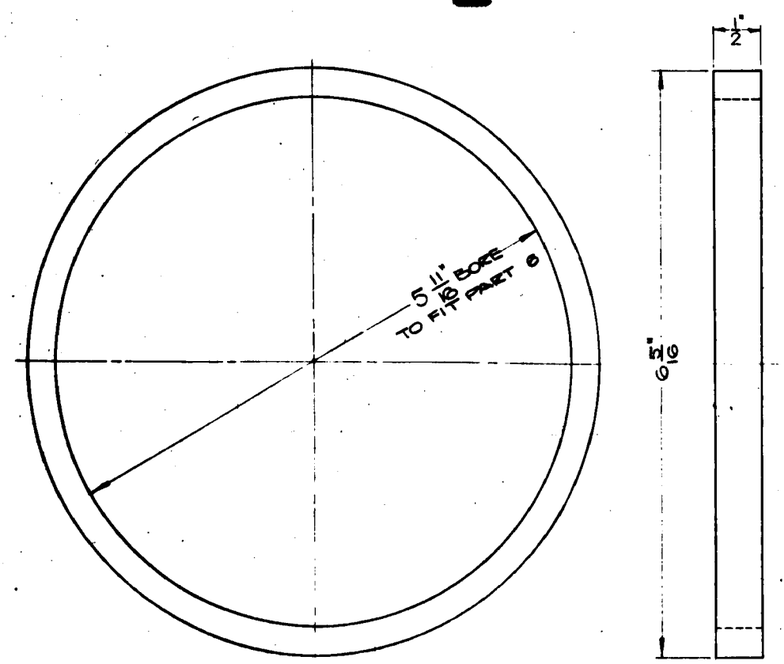

PART NO. 7
MATERIAL - LUCITE
NO. REQ'D. - 1

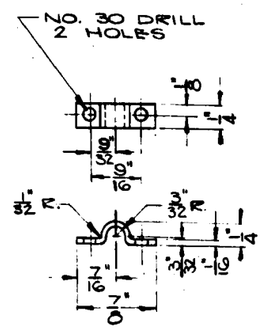

PART NO. 12
MATERIAL - BRASS
NO. REQ'D - 2

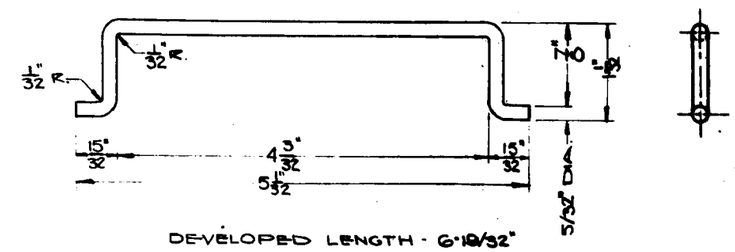

DEVELOPED LENGTH - 6 19/32"

PART NO. 13
MATERIAL - 18-8 STAINLESS STEEL
NO. REQ'D. - 1

UNCLASSIFIED

		APPROVED FOR CONST.		
		CHIEF ENG.		
		PROJ. ENG.	R.D.H.	5-24-45
		CHECKED	R.A.G.	5-26-45
		DRAWN	RKW	5-25-45
GROUP REPR.	GROUP NO.	LAYOUT ON SHEETS		
			INITIALS	DATE
FINISHING CHECKS: SMOOTH MACHINE, ROUGH MACHINE		CALC. WT.	#	
		ACT. WT.	#	
TOLERANCE EXCEPT AS NOTED: FRACTIONAL ±1/64, ANGLES ±1/2°, SHEET METAL ±1/32, DECIMALS NOTED		SUPERVISED		
		SUPERVISED BY		

REV. LTR. | CHANGES | ADDITIONAL SHEETS

MODEL OR TITLE: LUCITE CAN DP. 4

PAGE 58

APPROVED FOR PUBLIC RELEASE

APPROVED FOR PUBLIC RELEASE

UNCLASSIFIED

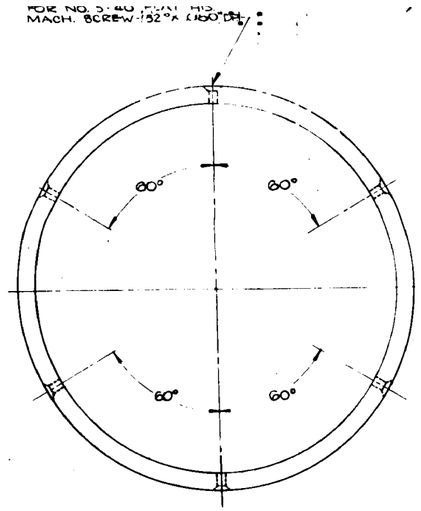

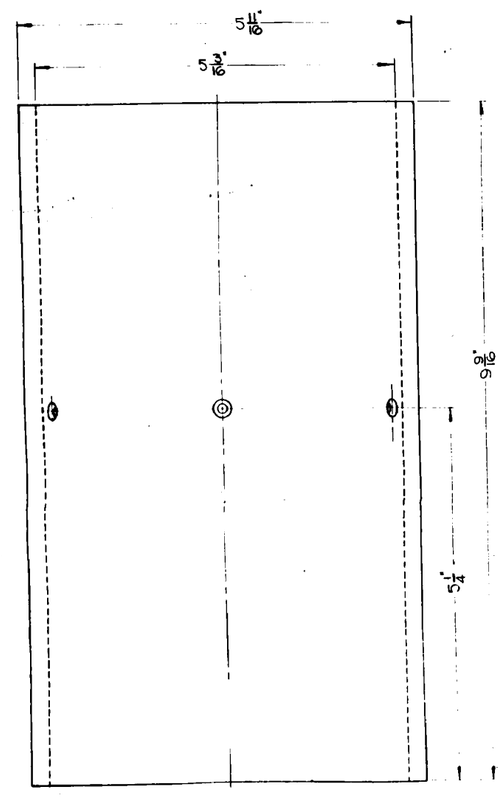

NOTE: CYLINDER MAY BE ROLLED FROM 1/4" SHEET. EDGES SCARFED AND BUTTED. CEMENTED JOINT MUST BE WATER-TIGHT

PART NO. 6
MATERIAL: LUCITE
NO. REQ'D.: 1

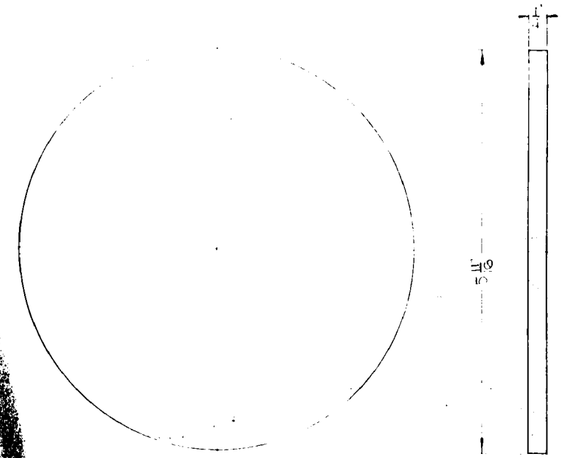

PART NO. 9
MATERIAL: LUCITE
NO. REQ'D.: 1

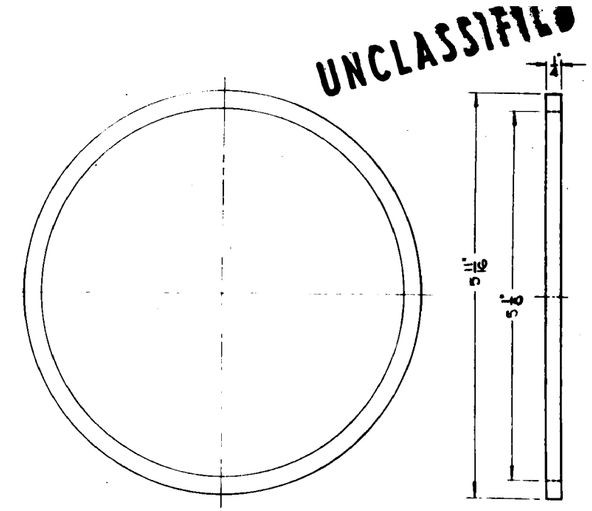

PART NO. 2
MATERIAL: RUBBER
NO. REQ'D.: 1

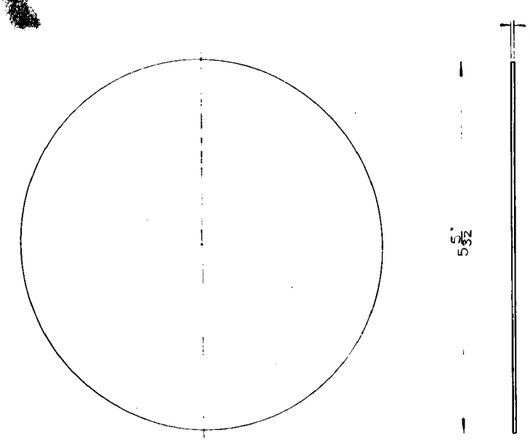

PART NO. 11
MATERIAL: RUBBER
NO. REQ'D.: 1

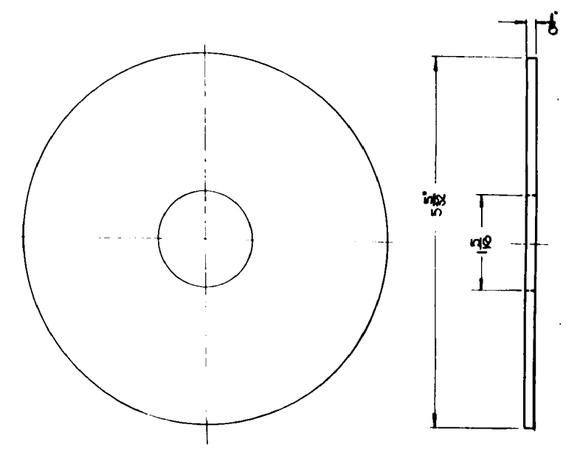

PART NO. 10
MATERIAL: RUBBER
NO. REQ'D.: 1

UNCLASSIFIED

		APPROVED FOR CONST.			
		CHIEF ENG.			
		FINAL ENG.	R.J.H.	8-24-45	
		ENGINEER	R.A.G.	8-24-45	
		DRAFTER	RKW	8-24-45	
GROUP DEPT.	GROUP NO.	LABOR ON ORDER			
			INITIALS	DATE	
GALL. WT.					
ACT. WT.					
TOLERANCE EXCEPT AS NOTED					
FRACTIONAL	± 1/64				
ANGLES	± 1/2°				
SHEET METAL BENDS	± 1/32				

ADDITIONAL DRAWING

LUCITE CAN DP-4

Y-5140

APPROVED FOR PUBLIC RELEASE

APPROVED FOR PUBLIC RELEASE

APPROVED FOR PUBLIC RELEASE

APPROVED FOR PUBLIC RELEASE

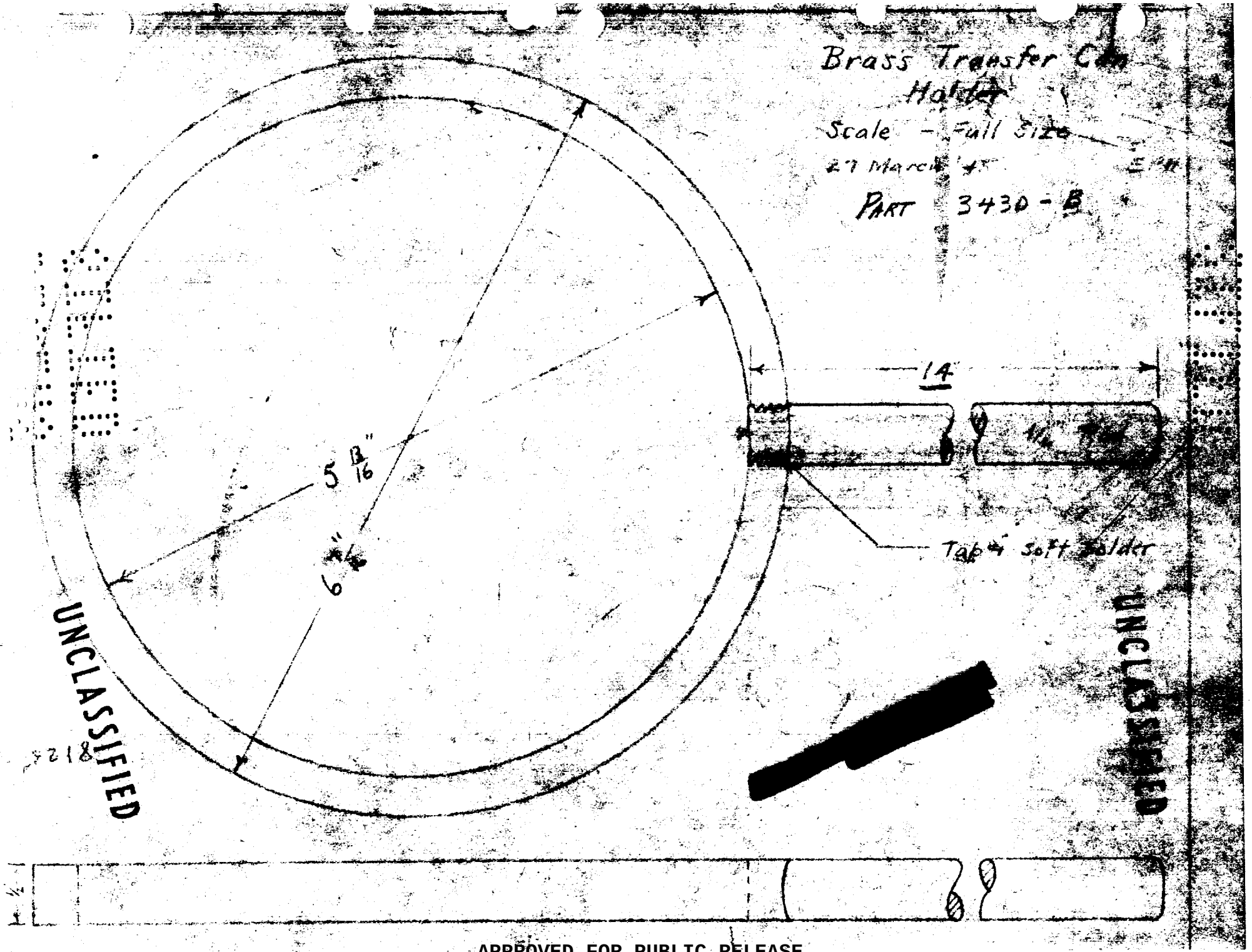

APPROVED FOR PUBLIC RELEASE

APPROVED FOR PUBLIC RELEASE

UNCLASSIFIED

MELLING SCALER

CLAMP FOR STORAGE BOTTLE

BRASS PART 3430-D

2 SCREWS

KNURL EDGE

1/4" 28 NF-2

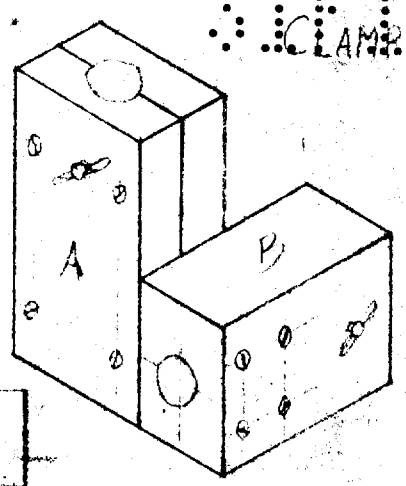

0.510 D
0.520 D HOLE

3 FLAT HEAD [redacted] SCREWS { 1 3/4" LONG, 4 1 1/2" LONG

1 HOLE DRILL AND TAP FOR 1/4" [redacted]-2 — THRU TO 1/2" HOLE

4 - 3/16" HOLES [redacted] COUNTERSINK

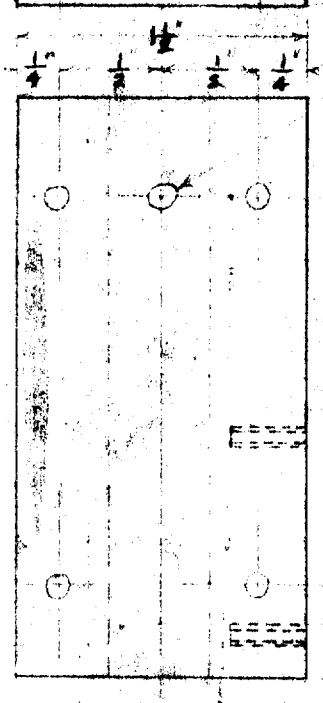

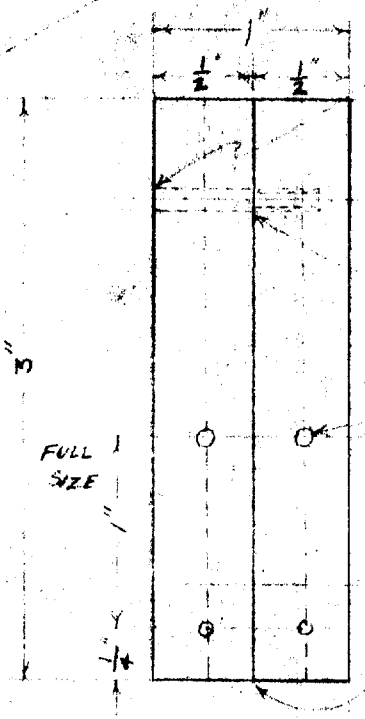

A

DRILL AND TAP FOR No.10 32 NF-2 — 4 HOLES 3/8" DEEP

— 4 HOLES DR. & TAP No.10 32 NF-2 3/8" DEEP

DRILL HOLES — SAW INTO 2 PIECES
16 GAGE METAL 4 OST

4 - 3/16" HOLES — COUNTERSINK

DR. & TAP 1/4" 28 NF-2 TO CENTER

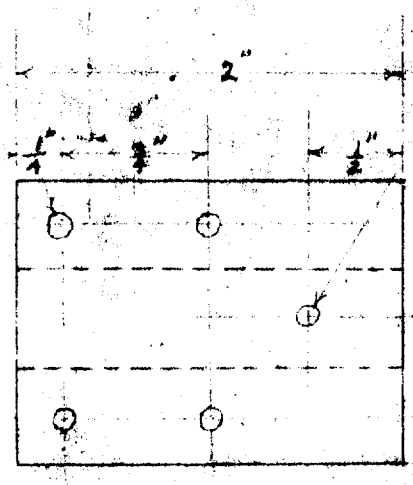

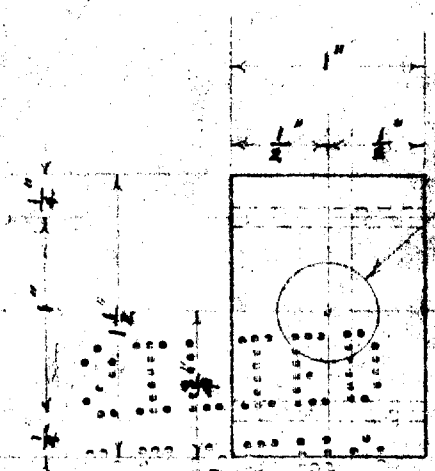

0.510 D
0.520 D HOLE

B

FULL SIZE

UNCLASSIFIED

5-22-45 WJM

APPROVED FOR PUBLIC RELEASE

APPROVED FOR PUBLIC RELEASE

UNCLASSIFIED

BALL JOINT CLAMP 102-7
PART 3440-A

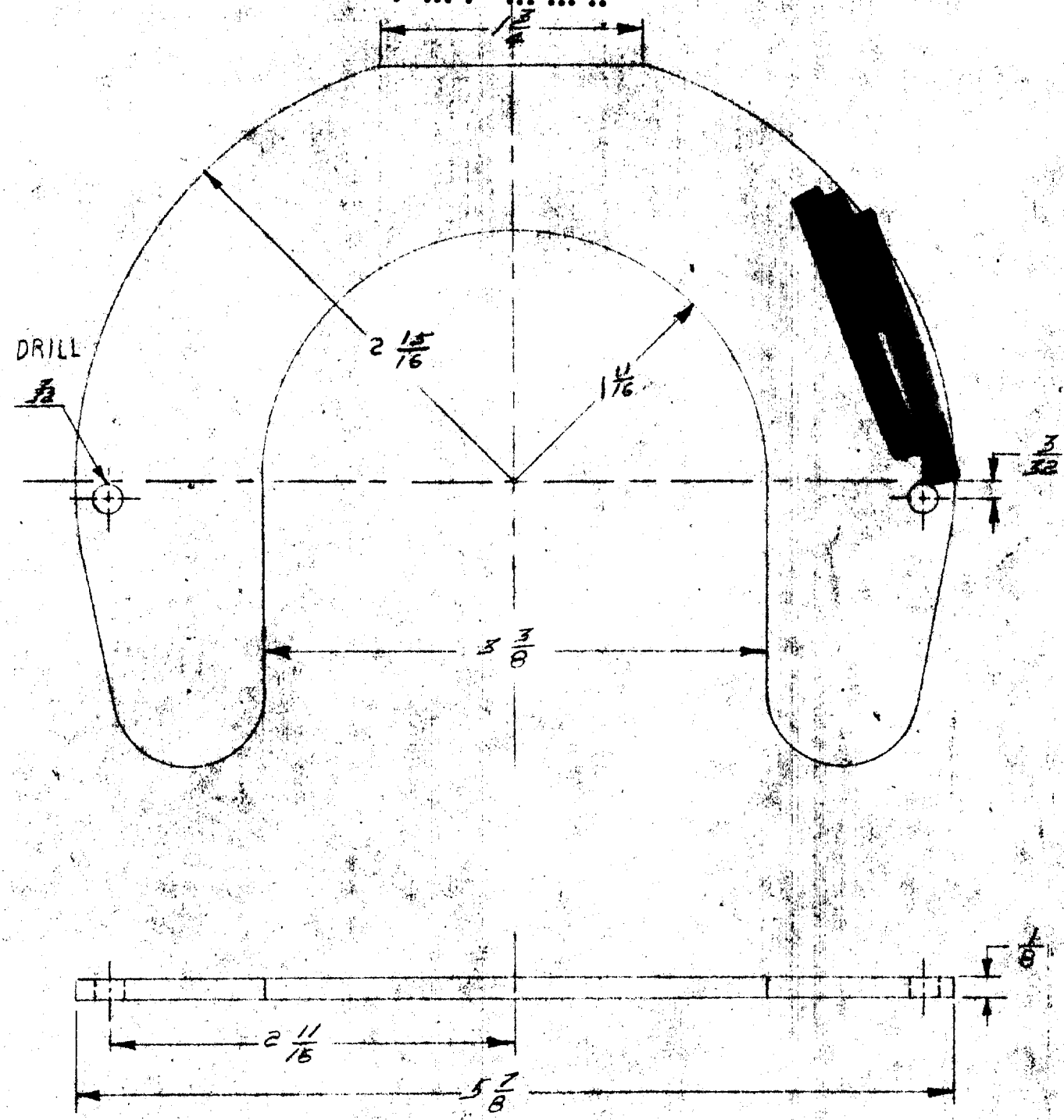

MAT. - BRASS
NO. REQ - 2
SCALE - FULL

UNCLASSIFIED

APPROVED FOR PUBLIC RELEASE

APPROVED FOR PUBLIC RELEASE

UNCLASSIFIED

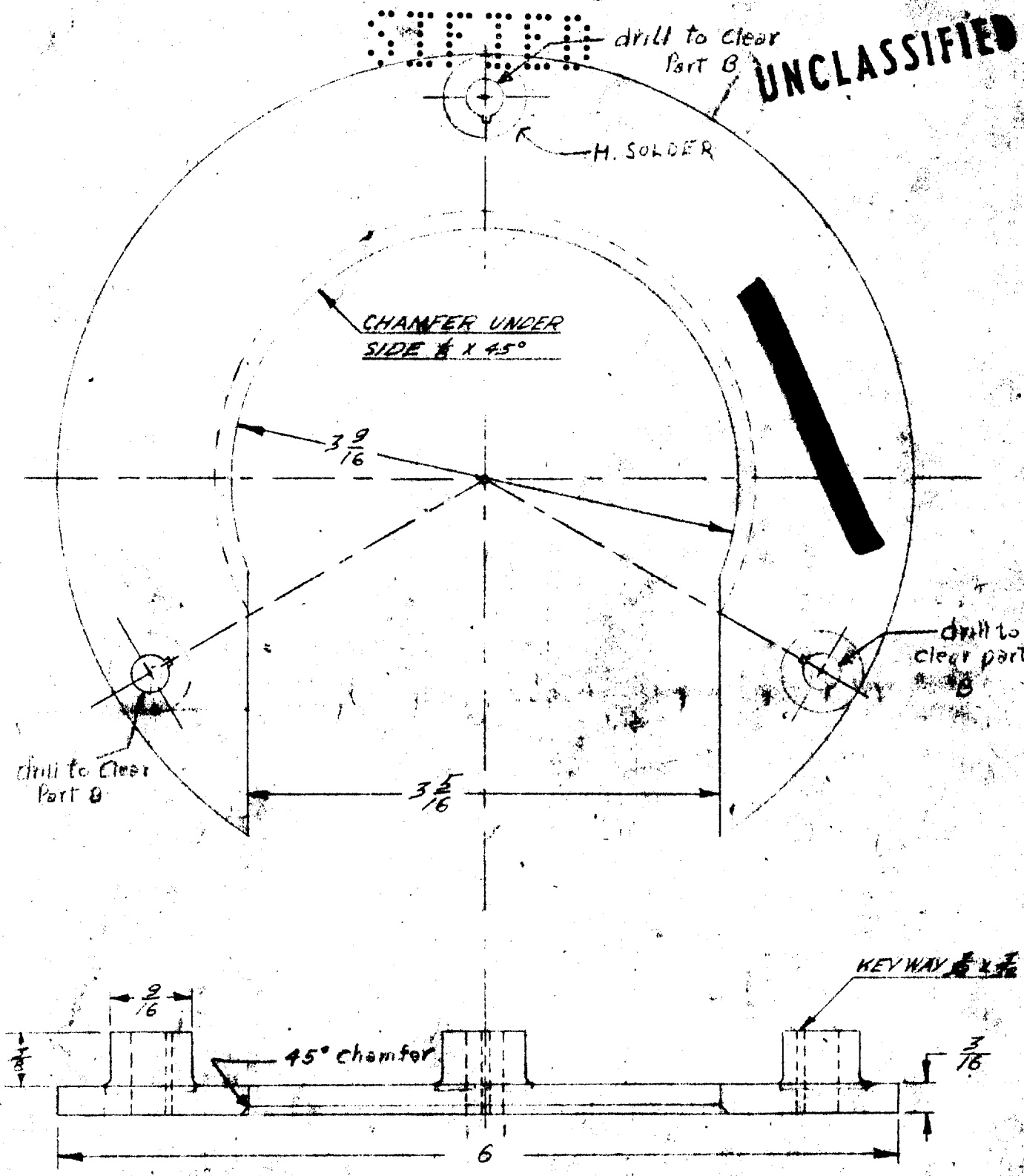

Part C required

102-75 SPECIAL B.J. CLAMP

PART 3440-B-1

MAT. - H.R. BRASS

NO. REQ. - 1

SCALE - FULL

UNCLASSIFIED

APPROVED FOR PUBLIC RELEASE

APPROVED FOR PUBLIC RELEASE

UNCLASSIFIED

UNCLASSIFIED

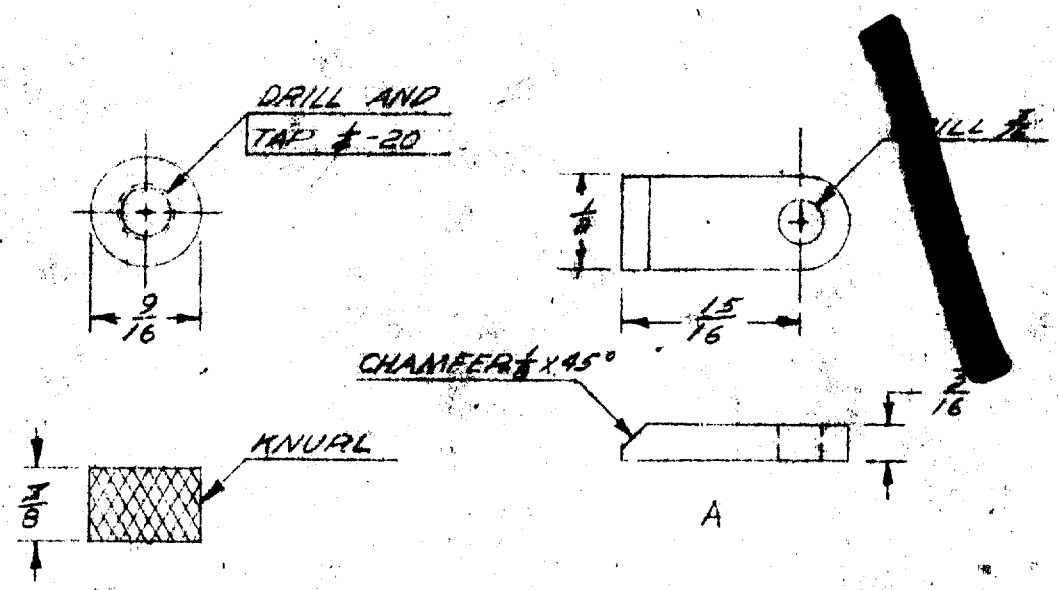

MAT. - BRASS
NO. REQ - 3

MAT - BRASS
NO. REQ - 3

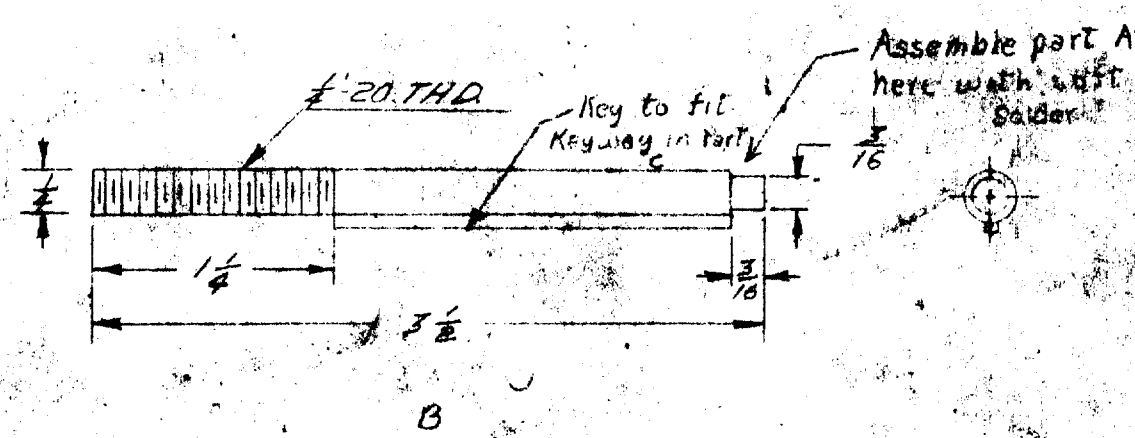

MAT. - 1/4" BRASS ROD
NO. REQ. - 3
MAT. FOR KEY - 1/16" BRASS ROD

PART 3440-B-2

UNCLASSIFIED

UNCLASSIFIED

SCALE - FULL

APPROVED FOR PUBLIC RELEASE

APPROVED FOR PUBLIC RELEASE

UNCLASSIFIED

SPECIAL BALL JOINT CLAMP

SHEET 1 OF 3

ASSEMBLY

PART 3440-C-1

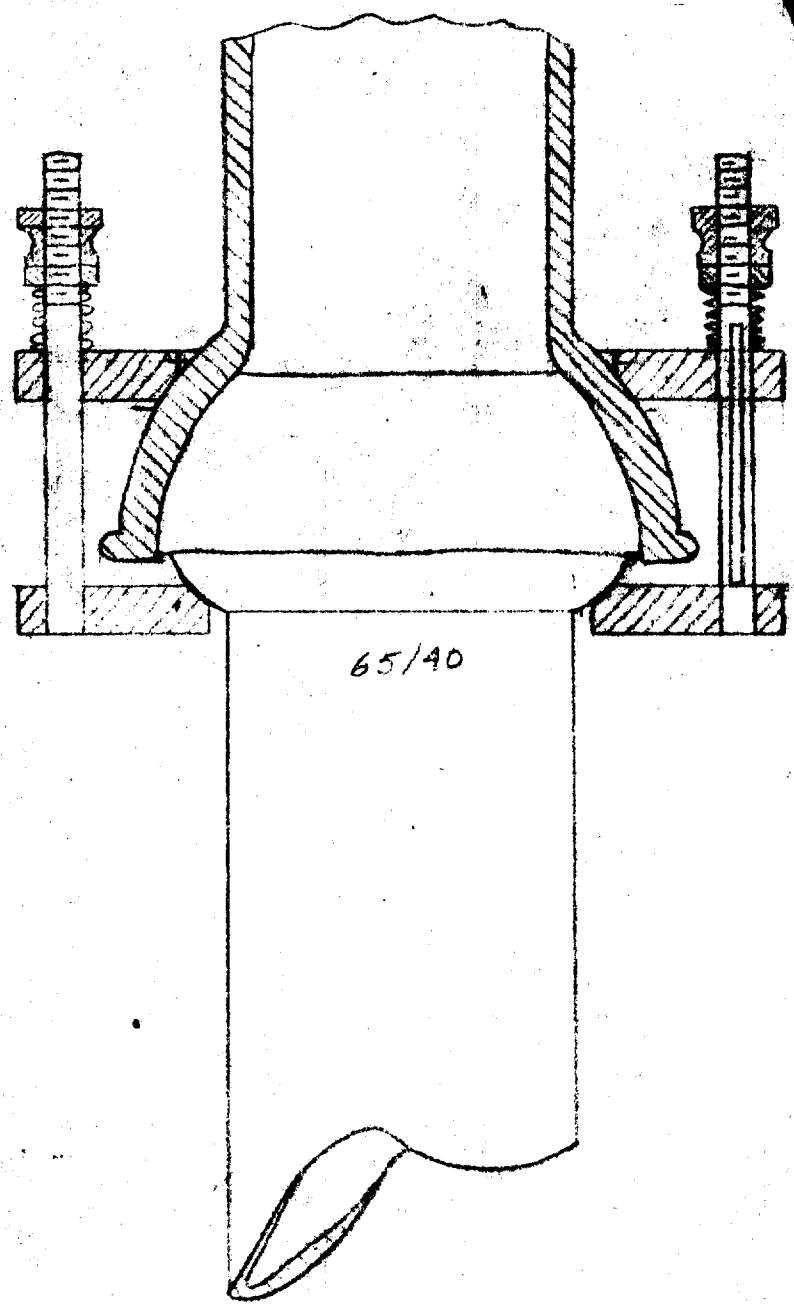

SCALE 1" = 1"

UNCLASSIFIED

APPROVED FOR PUBLIC RELEASE

APPROVED FOR PUBLIC RELEASE

UNCLASSIFIED

SPECIAL BALL-JOINT CLAMP

SHEET 2 OF 3

TERIAL - $\frac{1}{4}$" SHEET BRASS

KE - ONE

PART 3440-C-2

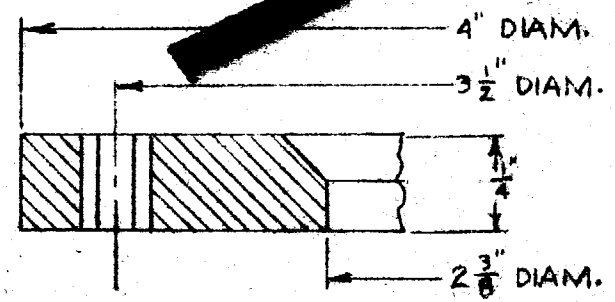

SECTION A-A

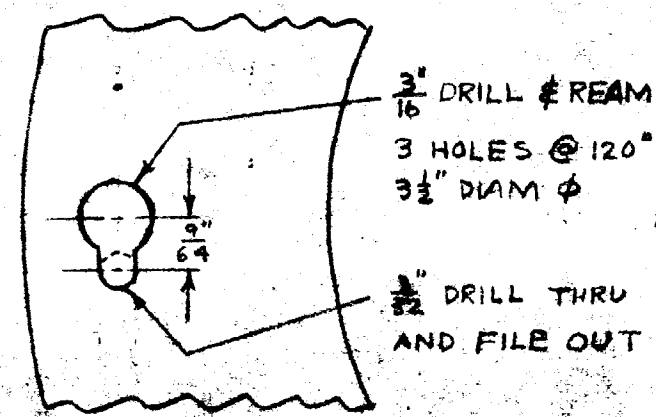

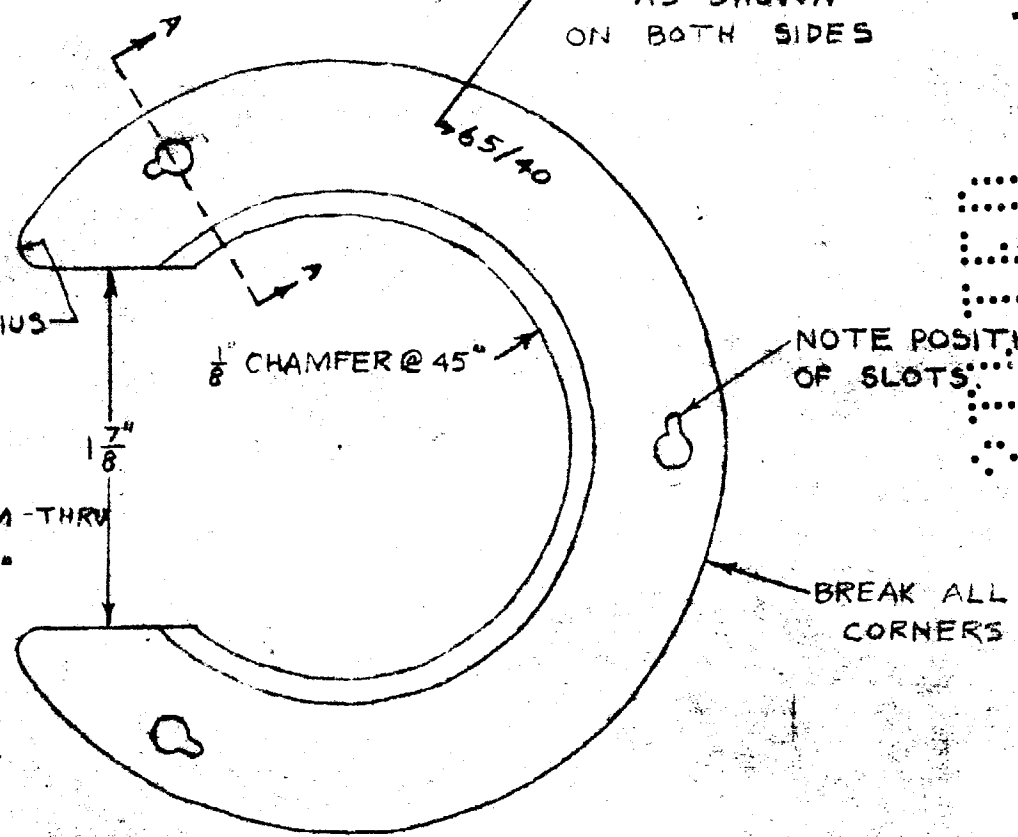

PART A

UNCLASSIFIED

PAGE 66

APPROVED FOR PUBLIC RELEASE

APPROVED FOR PUBLIC RELEASE

UNCLASSIFIED

SPECIAL BALL-JOINT CLAMP

PART 3-440-C-3

NOTE: PROVIDE THREE THUMB NUTS AND THREE HEX JAM NUTS.
PROVIDE THREE SPRINGS - $\frac{3}{4}$" FREE LENGTH - GROUND ENDS - $\frac{1}{8}$" PITCH - 0.029" SPRING WIRE - SPRING $\frac{3}{8}$" O.D.

PART D - BRA[redacted] MAKE THREE

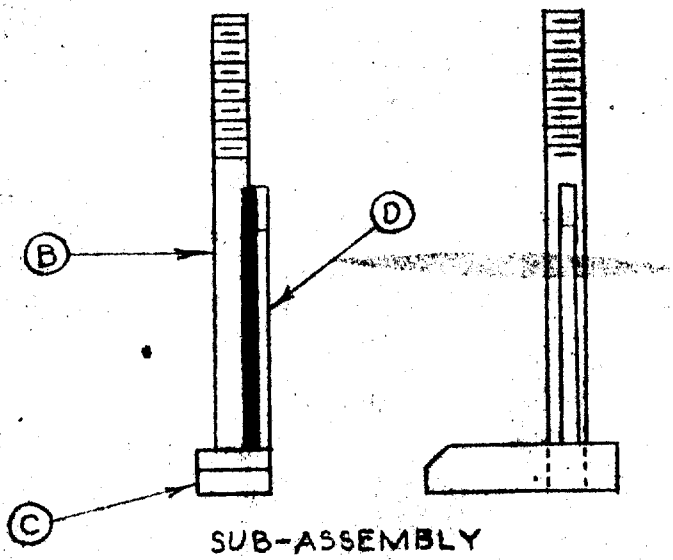

SUB-ASSEMBLY
(SOFT SOLDER TOGETHER)

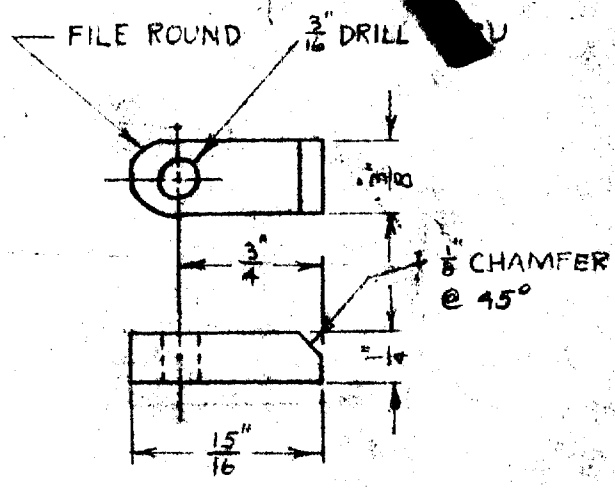

PART C - BRASS - MAKE THREE

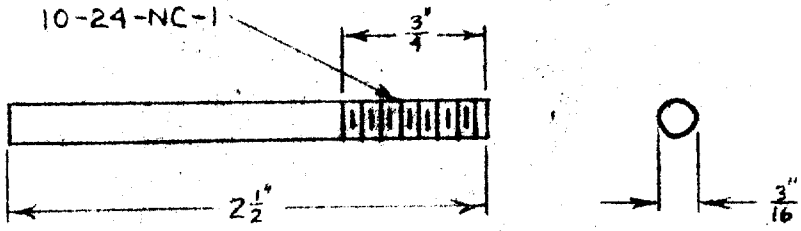

PART B - BRASS - MAKE THREE

UNCLASSIFIED

APPROVED FOR PUBLIC RELEASE

APPROVED FOR PUBLIC RELEASE

UNCLASSIFIED

CONDENSER STAND ASSEMBLY

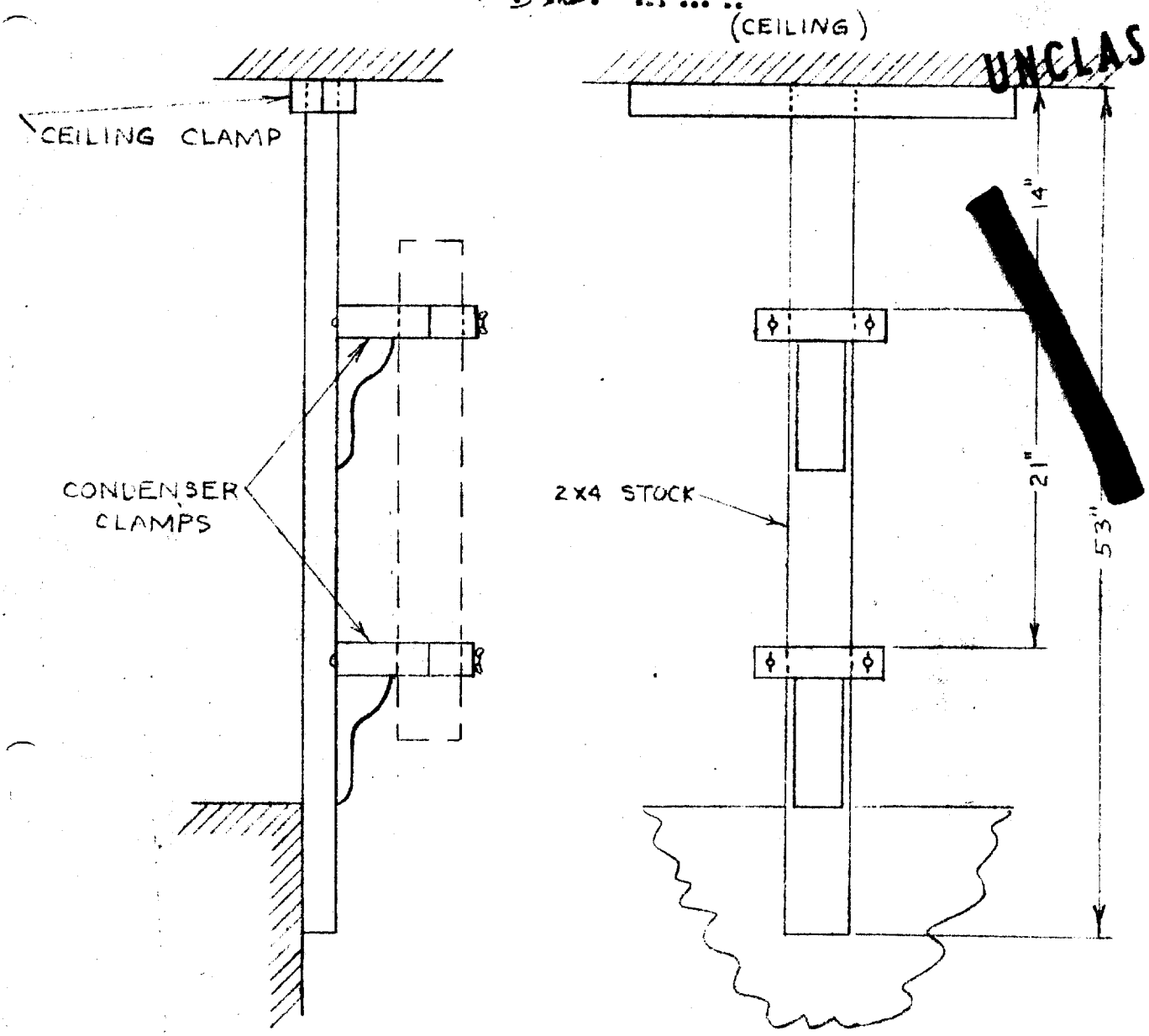

UNCLASSIFIED

GROUP CM-5
PHONE 233

APPROVED FOR PUBLIC RELEASE

APPROVED FOR PUBLIC RELEASE

UNCLASSIFIED

CONDENSER CLAMP

3450-A

MATERIAL - PINE
MAKE TWO

UNCLASSIFIED

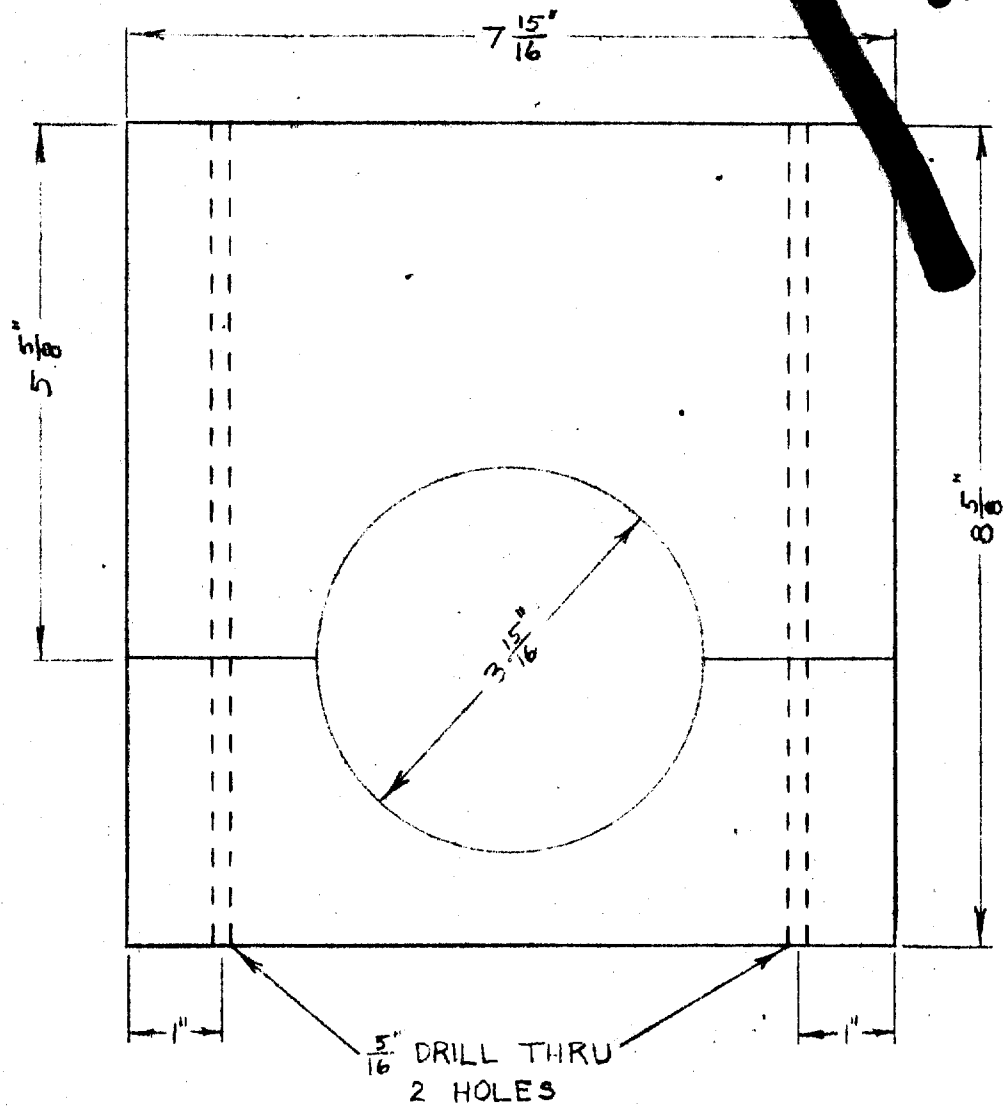

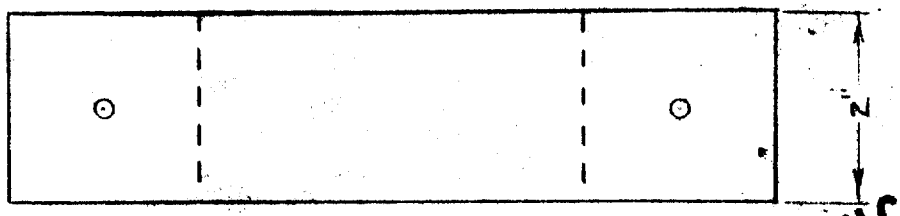

UNCLASSIFIED

GROUP CM-5
PHONE 233

UNCLASSIFIED

APPROVED FOR PUBLIC RELEASE

APPROVED FOR PUBLIC RELEASE

UNCLASSIFIED

CONDENSER CLAMP BRACKET

3450-B

MATERIAL - HINE
MAKE TWO

UNCLASSIFIED

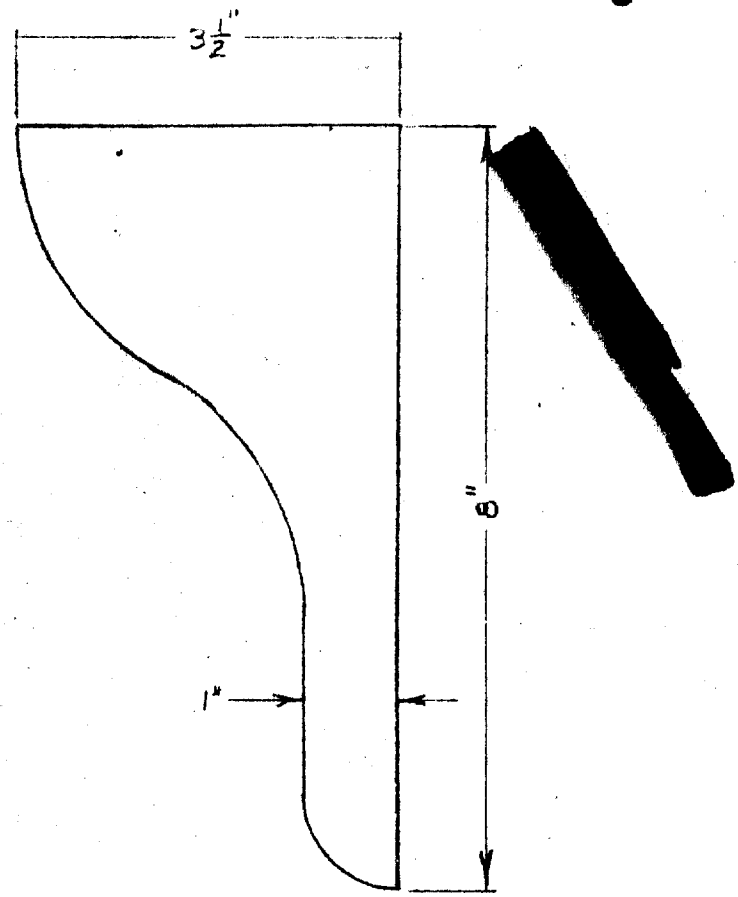

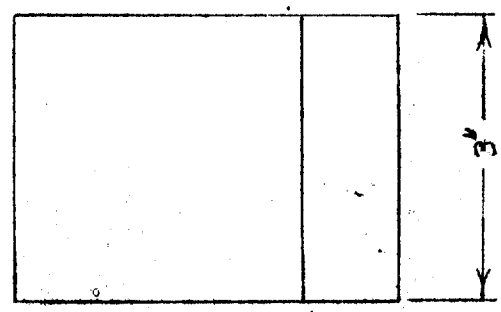

UNCLASSIFIED

GROUP CM-5
PHONE 233

UNCLASSIFIED

APPROVED FOR PUBLIC RELEASE

APPROVED FOR PUBLIC RELEASE

UNCLASSIFIED

CEILING CLAMP FOR CONDENSER STAND

3450-C

MATERIAL - PINE
MAKE ONE

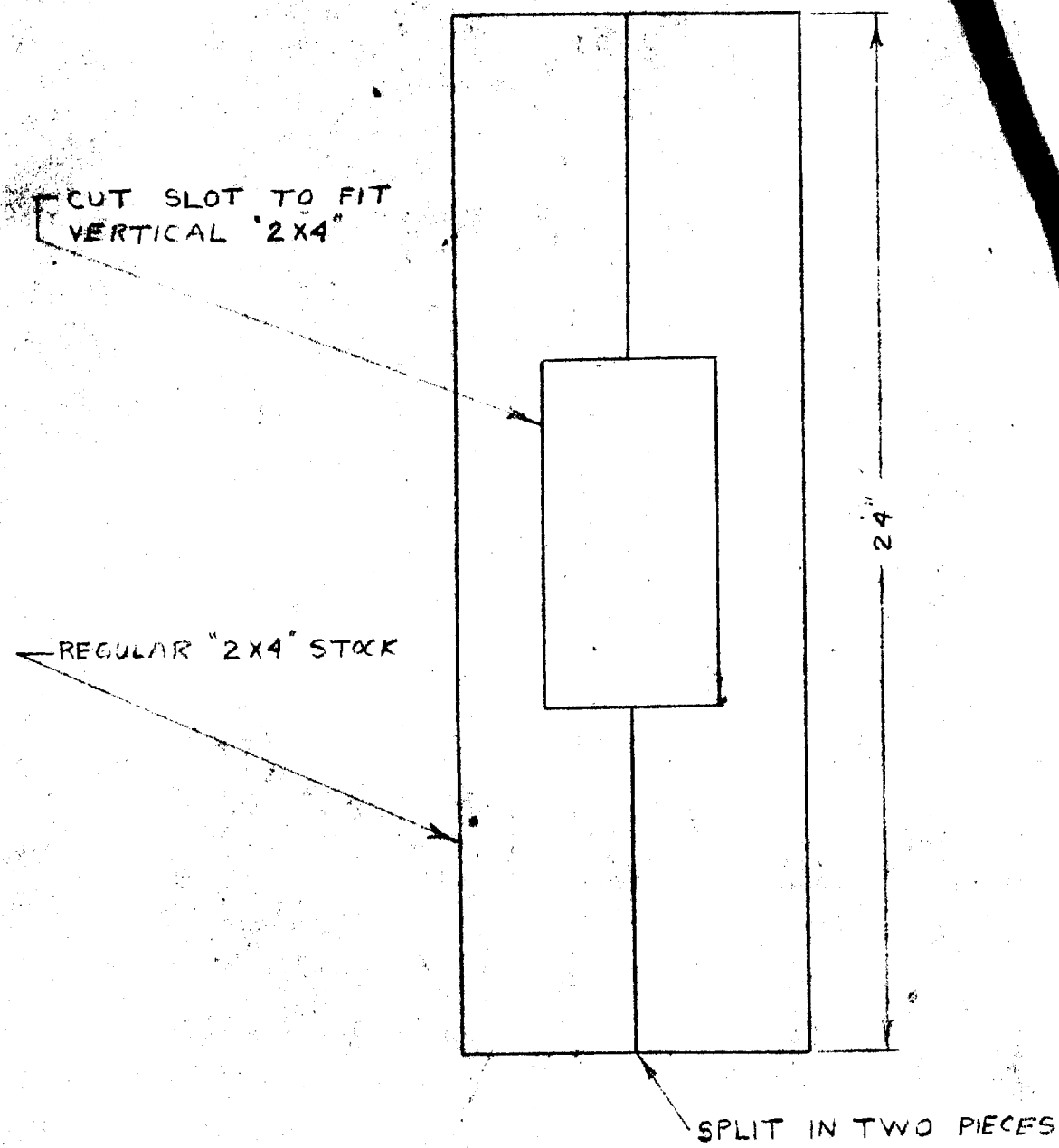

UNCLASSIFIED

GROUP CM-5
PHONE 233

APPROVED FOR PUBLIC RELEASE

APPROVED FOR PUBLIC RELEASE

UNCLASSIFIED

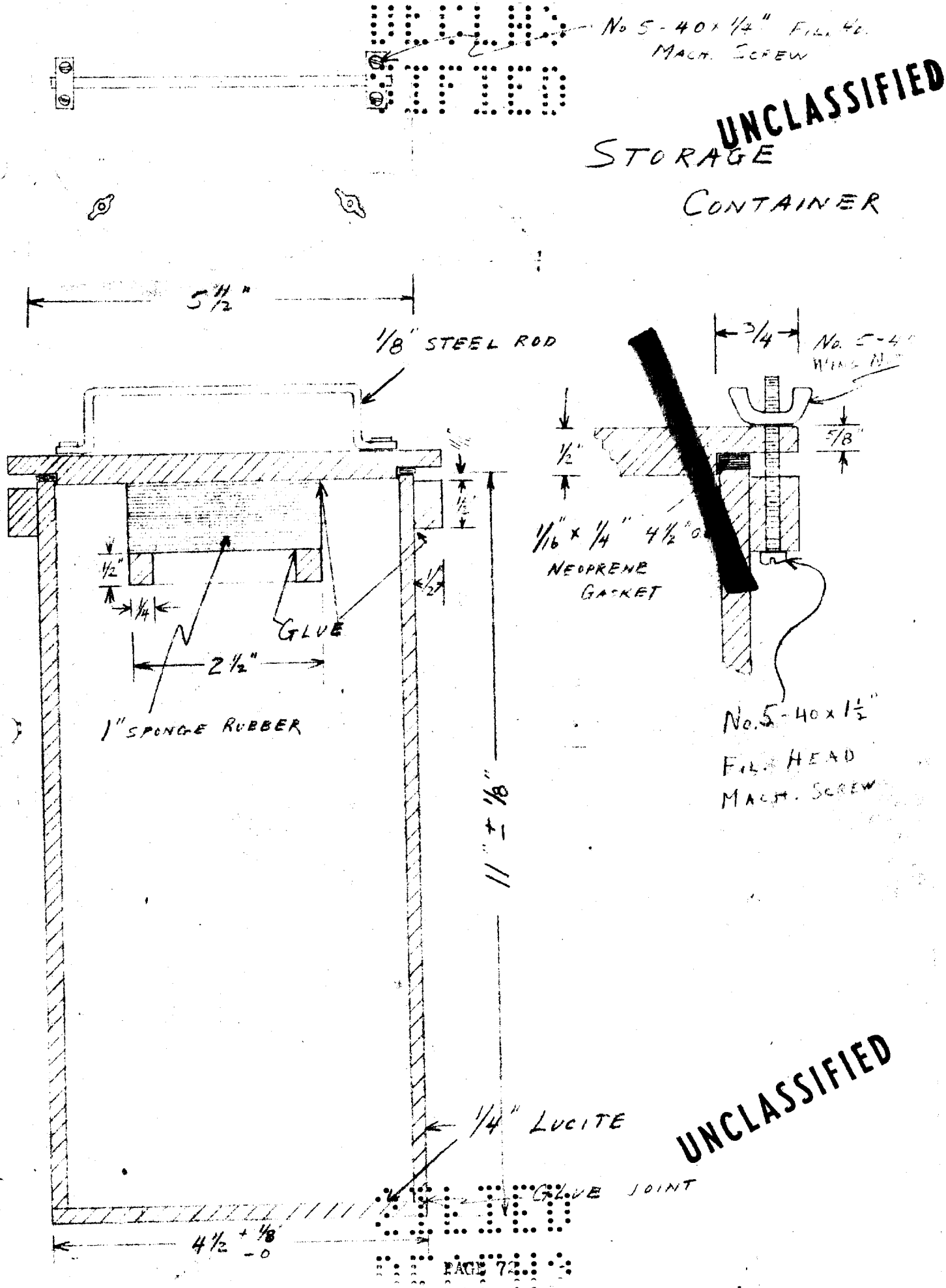

UNCLASSIFIED

APPROVED FOR PUBLIC RELEASE

APPROVED FOR PUBLIC RELEASE

SEALED

Hood Top

4 Plug Receptacle

UNCLASSIFIED

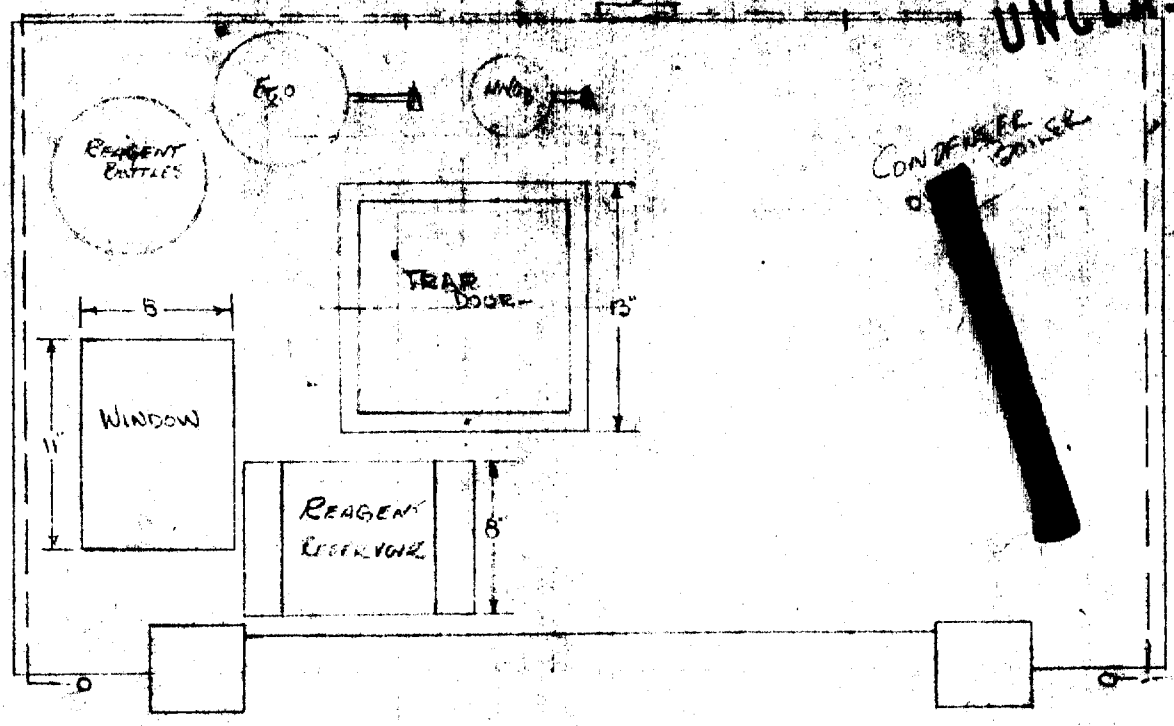

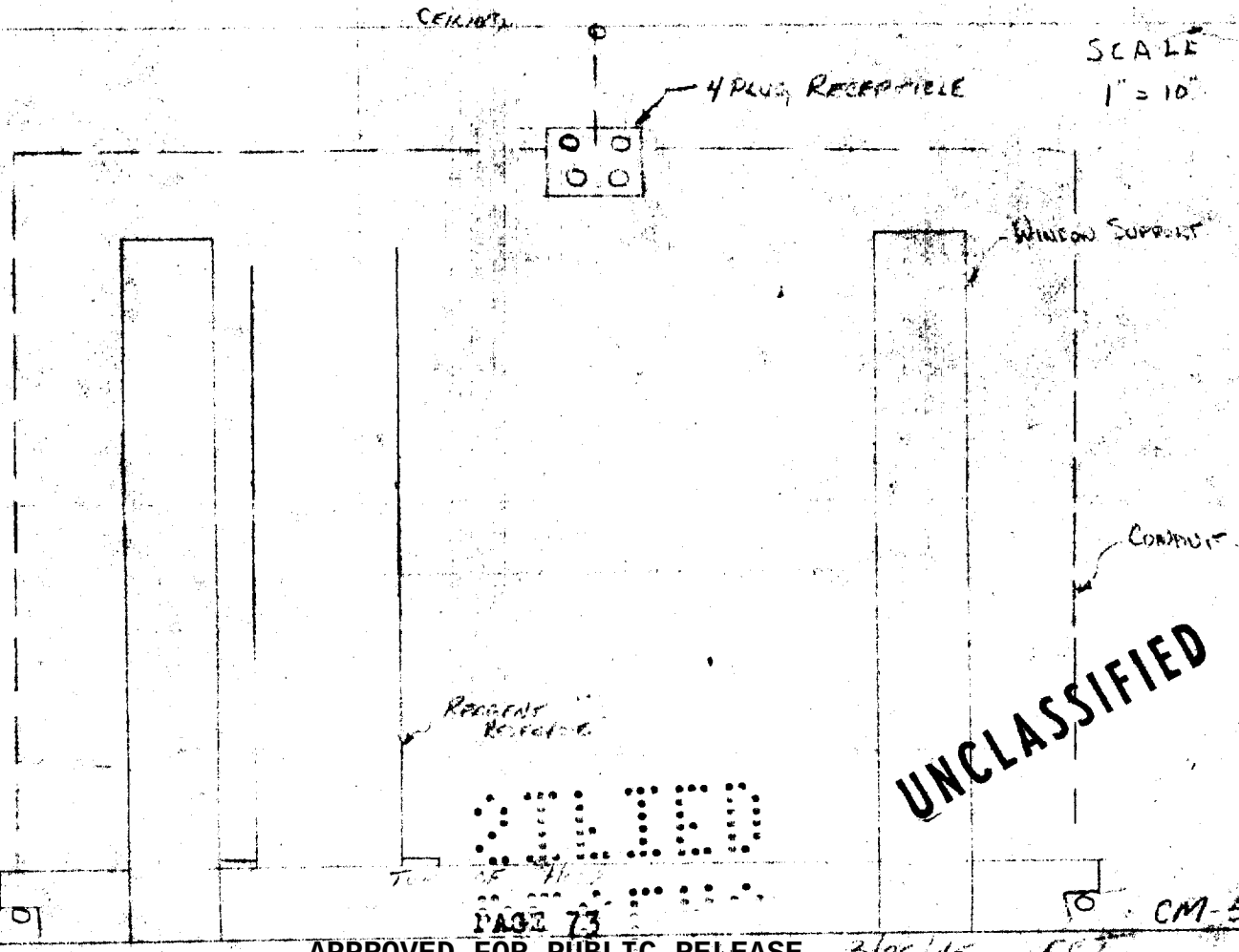

UNCLASSIFIED

SEALED

CM-5

3/26/45

APPROVED FOR PUBLIC RELEASE

APPROVED FOR PUBLIC RELEASE

UNCLASSIFIED

HOOD TRAP DOOR

MATERIAL - PLYWOOD PINE

MAKE ONE

3470-A

UNCLASSIFIED

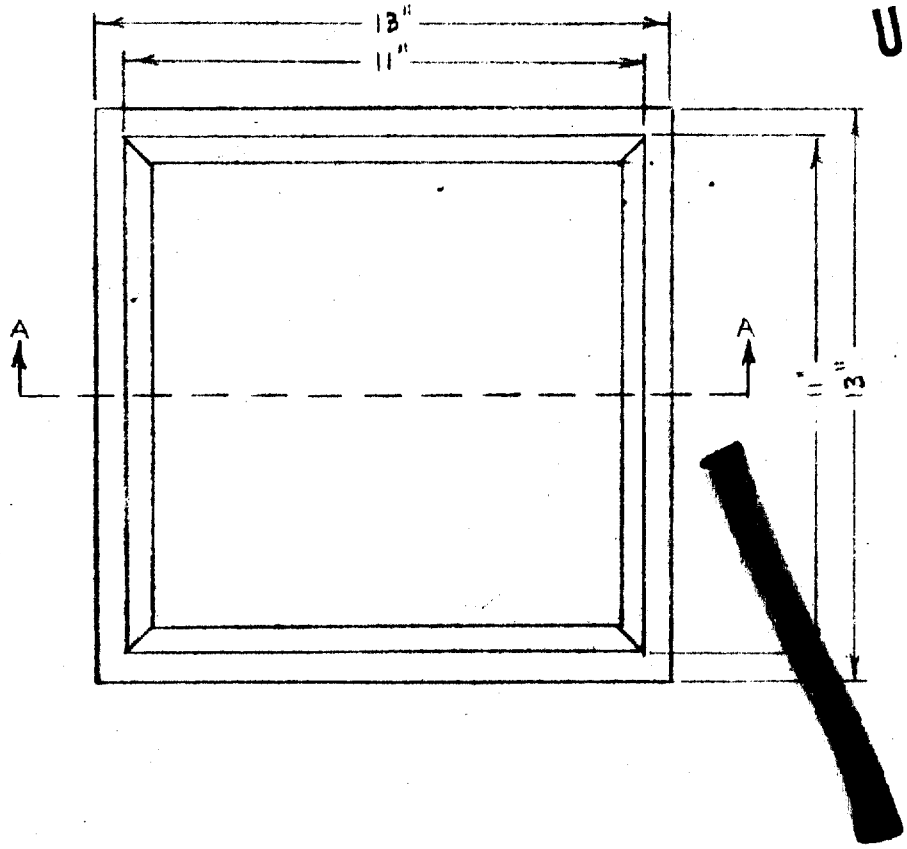

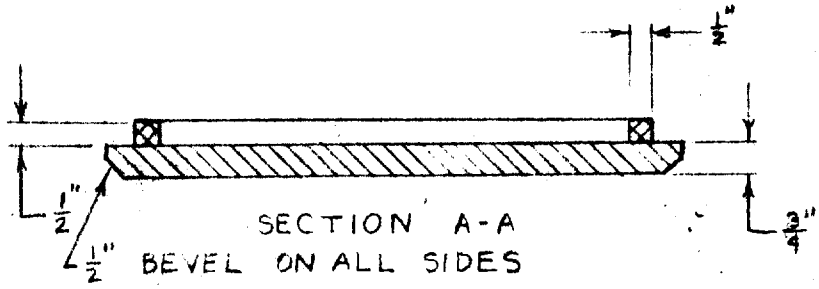

SECTION A-A

UNCLASSIFIED

GROUP CM-5
PHONE 233

APPROVED FOR PUBLIC RELEASE

APPROVED FOR PUBLIC RELEASE

UNCLASSIFIED

Hood Support Brace

Part 3480

UNCLASSIFIED

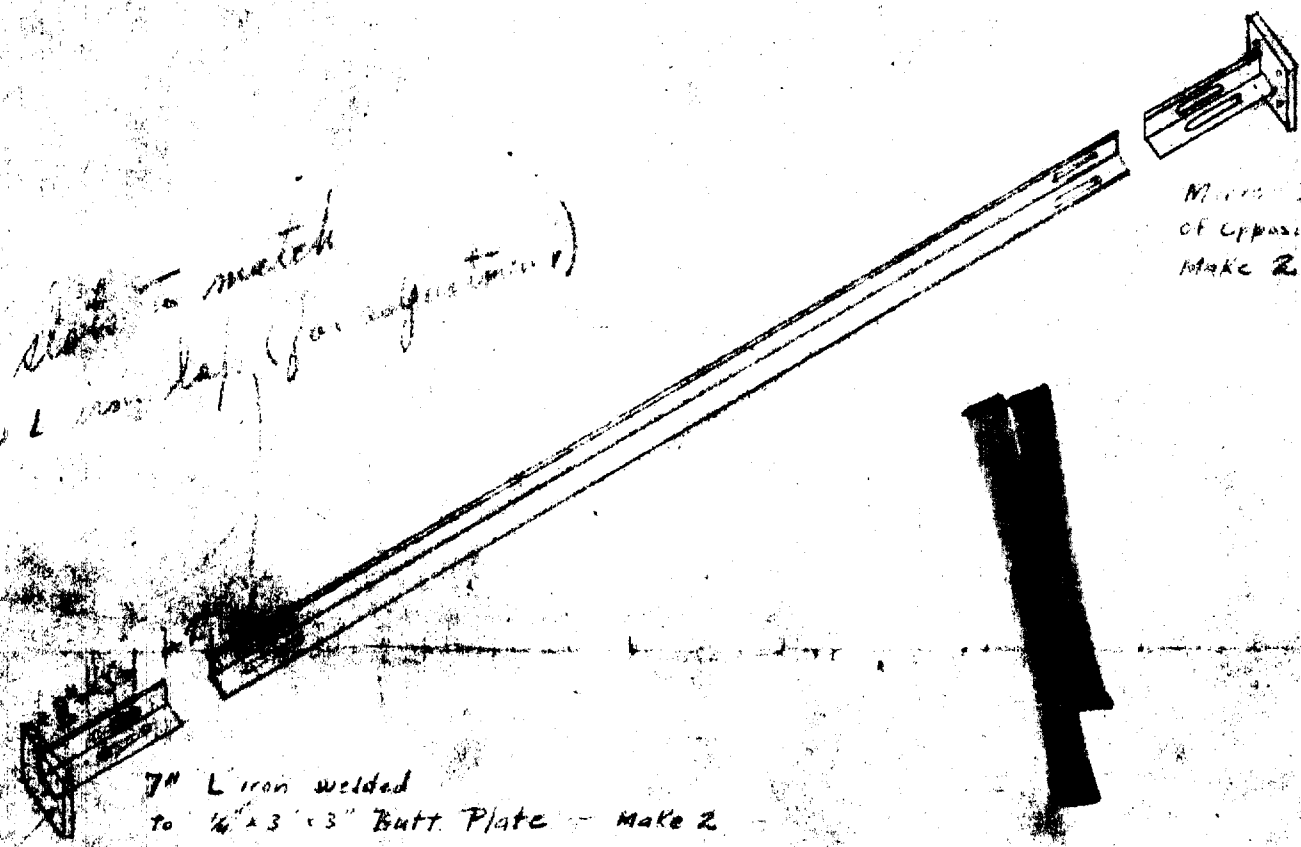

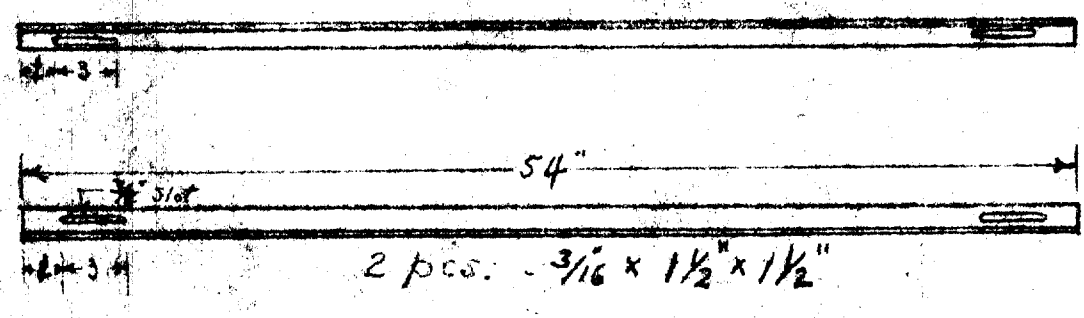

L

UNCLASSIFIED

Note: all slots 3/8 x 3"

Scale 1/10

27 March 45

EPH

MAKE TWO

CM-5

APPROVED FOR PUBLIC RELEASE

APPROVED FOR PUBLIC RELEASE

UNCLASSIFIED

UNCLASSIFIED

Glycol Solution
Storage Tank
#3490

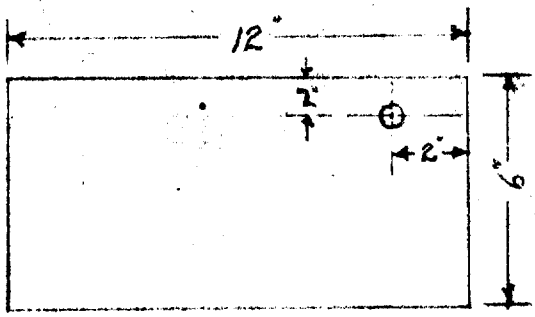

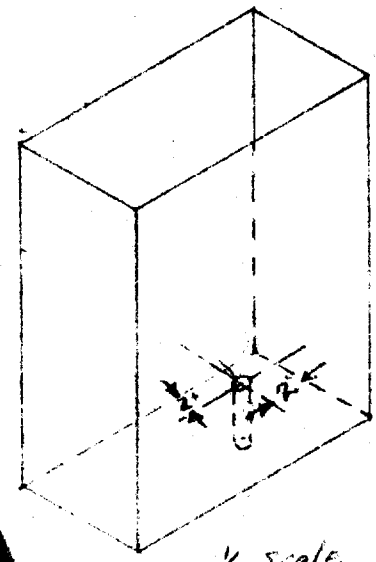

½ Scale
open top

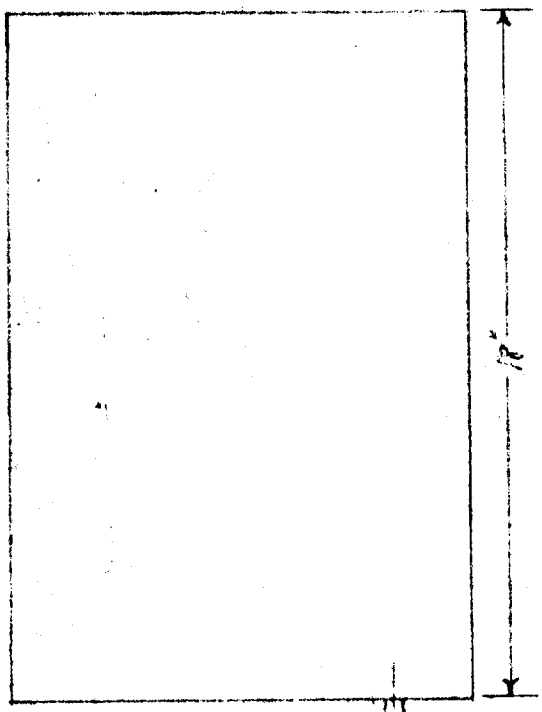

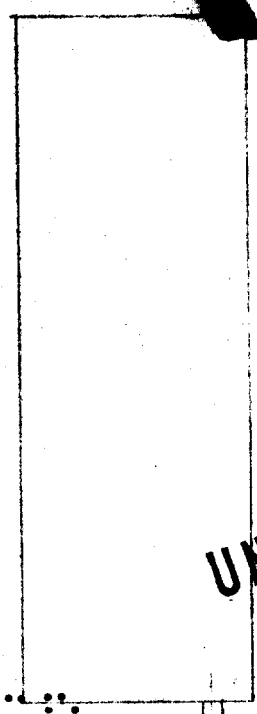

UNCLASSIFIED

CM-5

Scale 1" = 2/10"
March 26, 1945

Note: Tank to be made of
18 gauge galvanized iron (welded)
½"D - 3" Nipple to be welded as shown.

UNCLASSIFIED

APPROVED FOR PUBLIC RELEASE

APPROVED FOR PUBLIC RELEASE

UNCLASSIFIED

Pump Tray
3510

UNCLASSIFIED

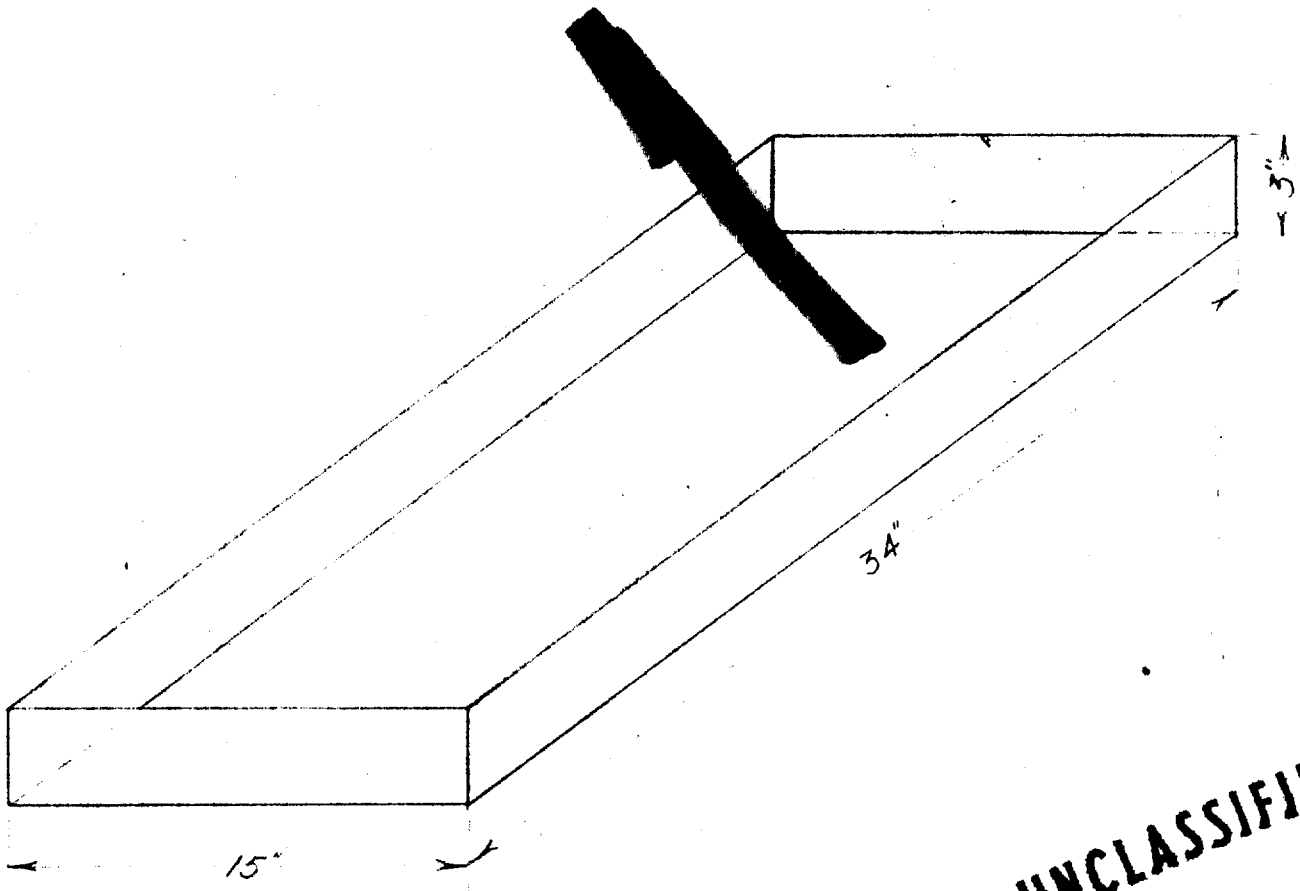

UNCLASSIFIED

Make Tray of 18 gauge Black Iron
Hard Solder

UNCLASSIFIED

25-Apr-45.

APPROVED FOR PUBLIC RELEASE

APPROVED FOR PUBLIC RELEASE

DECLASSIFIED

UNCLASSIFIED

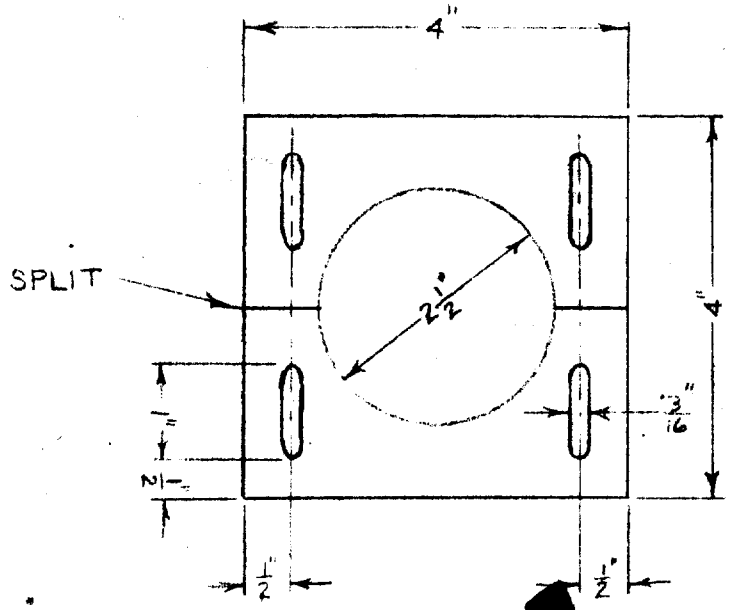

VAPOR TUBE SEAL

MATERIAL - 1/2" PLYWOOD

MAKE ONE

3520-A

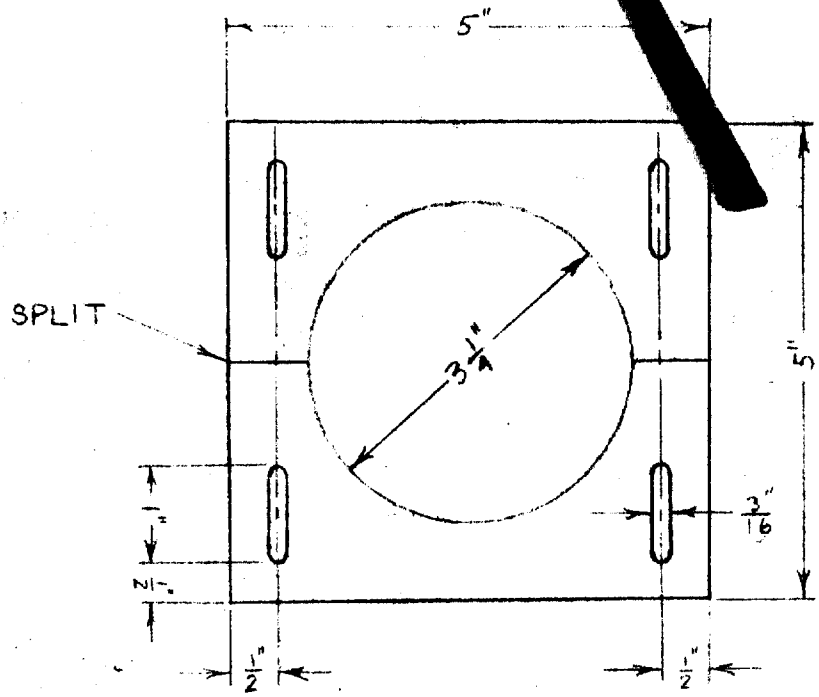

CONDENSER SEAL

MATERIAL - 1/2" PLYWOOD

MAKE ONE

3520-B

UNCLASSIFIED

DECLASSIFIED

GROUP CM5
PHONE 233

APPROVED FOR PUBLIC RELEASE

APPROVED FOR PUBLIC RELEASE

UNCLASSIFIED

G.I Can for S.N. Bottles

3540

UNCLASSIFIED

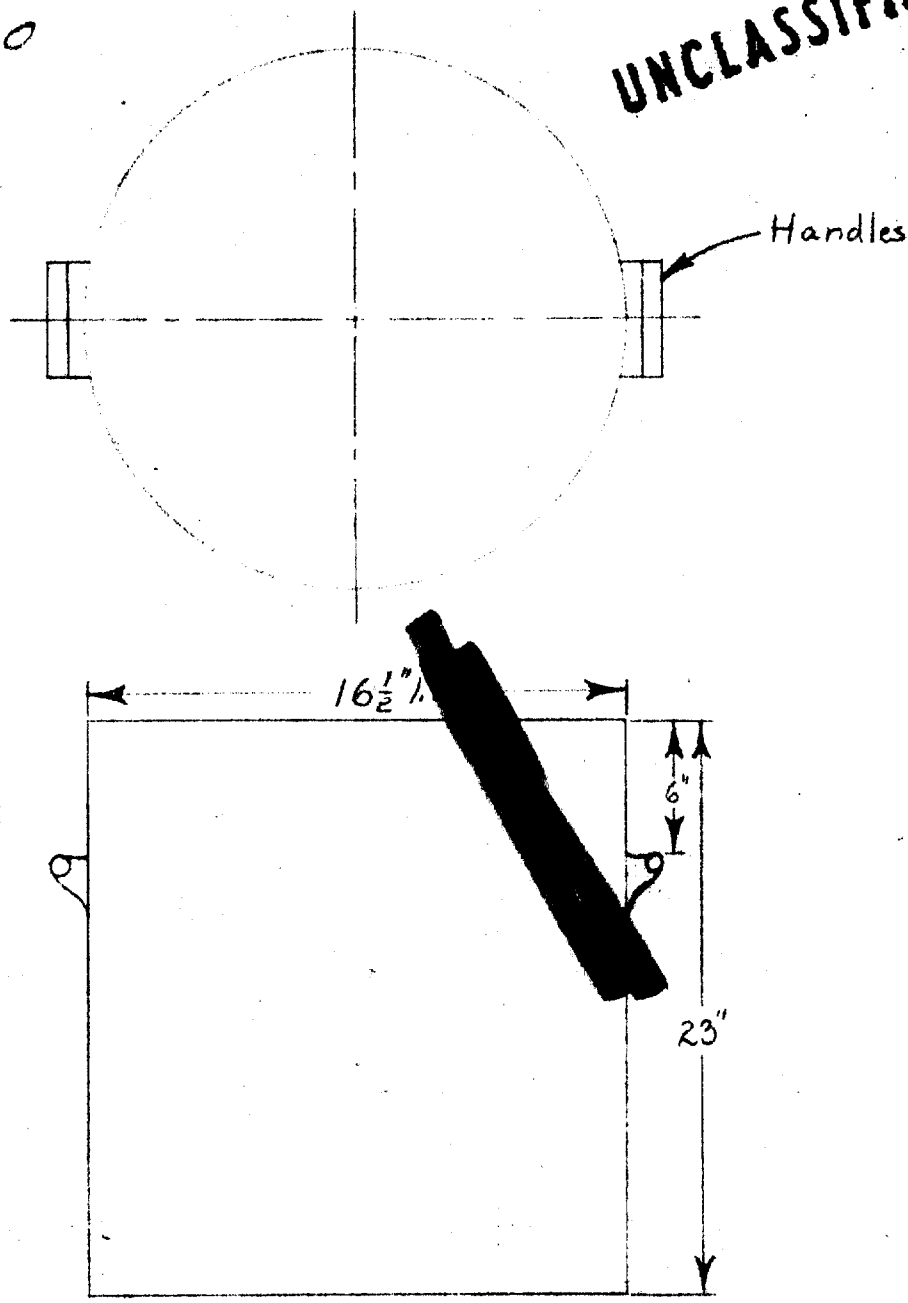

Material: Galvanized Iron

Can must not leak and must be of sturdy construction. Details of construction left to the discretion of bidders.

UNCLASSIFIED

APPROVED FOR PUBLIC RELEASE

APPROVED FOR PUBLIC RELEASE

Stop Lock Clamp

REMOTE CONTROL

PART NO. [redacted]

DRWG. NO. CM5-24316 12/12

3560

UNCLASSIFIED

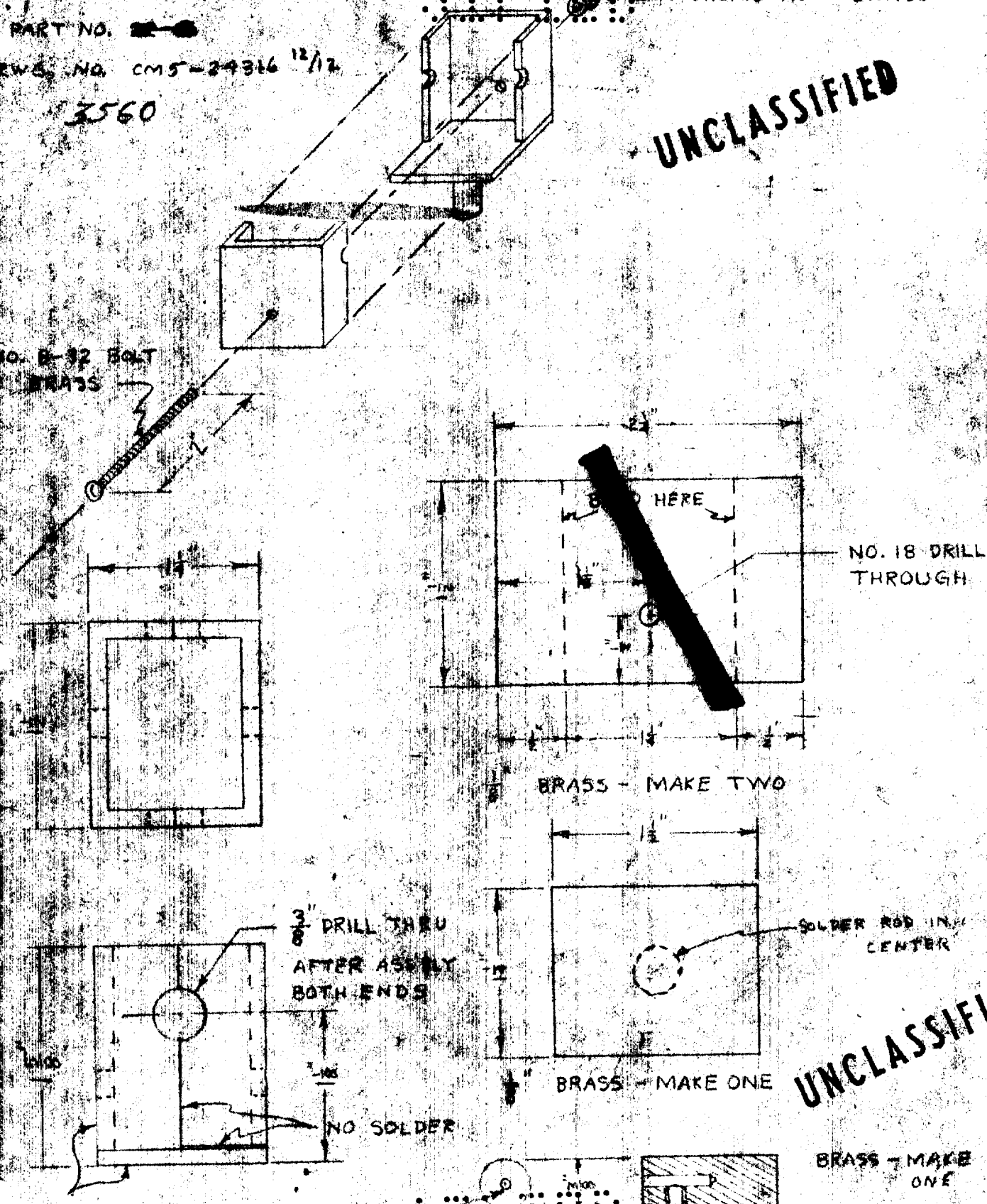

UNCLASSIFIED

APPROVED FOR PUBLIC RELEASE

APPROVED FOR PUBLIC RELEASE

UNCLASSIFIED

UNCLASSIFIED

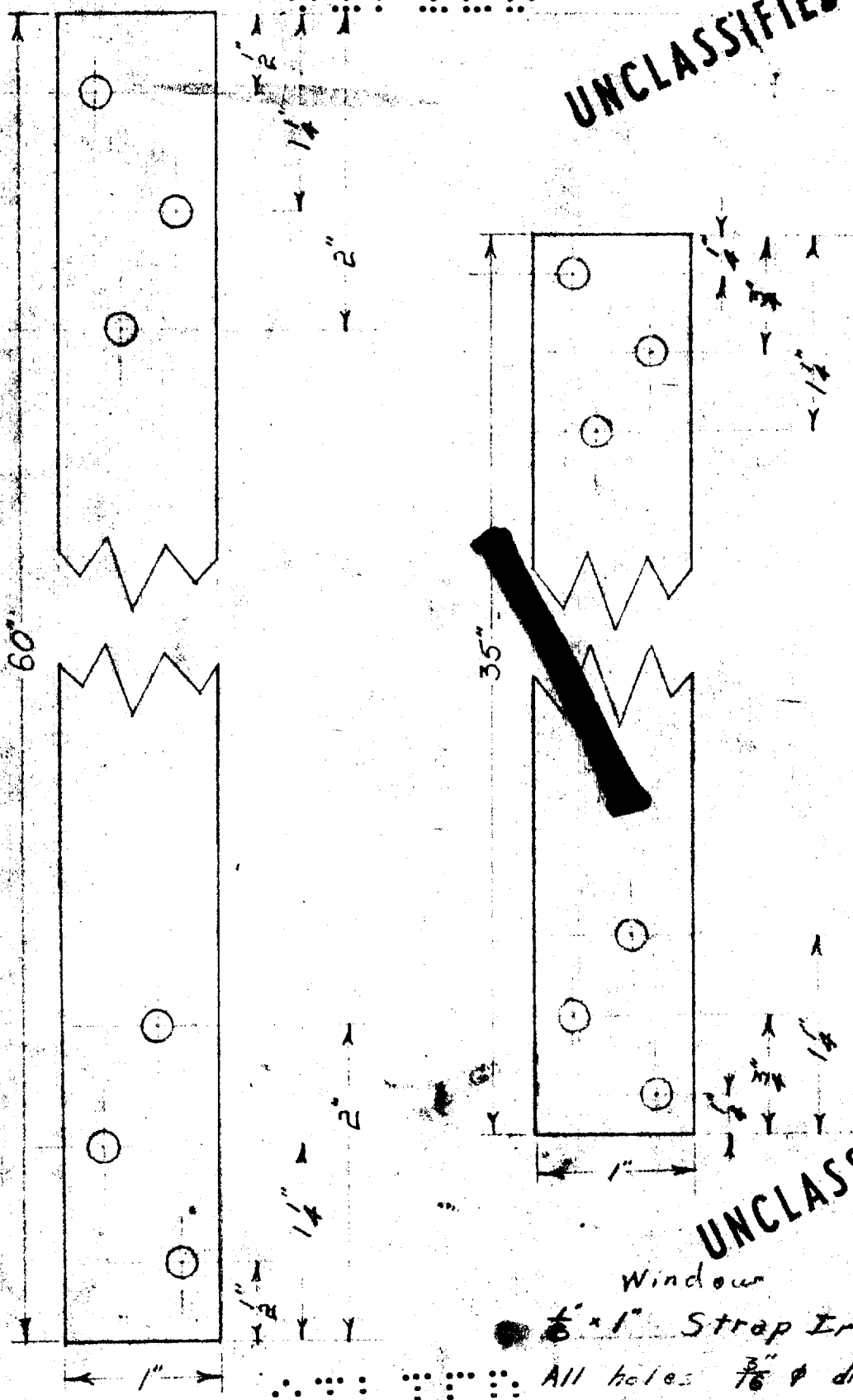

UNCLASSIFIED

Window

$\frac{1}{8}$" × 1" Strap Iron

All holes $\frac{3}{16}$" ϕ drill thru

3590

24 - Apr. - 45.

UNCLASSIFIED

APPROVED FOR PUBLIC RELEASE

APPROVED FOR PUBLIC RELEASE

UNCLASSIFIED

Bubbler Shield
#3620

UNCLASSIFIED

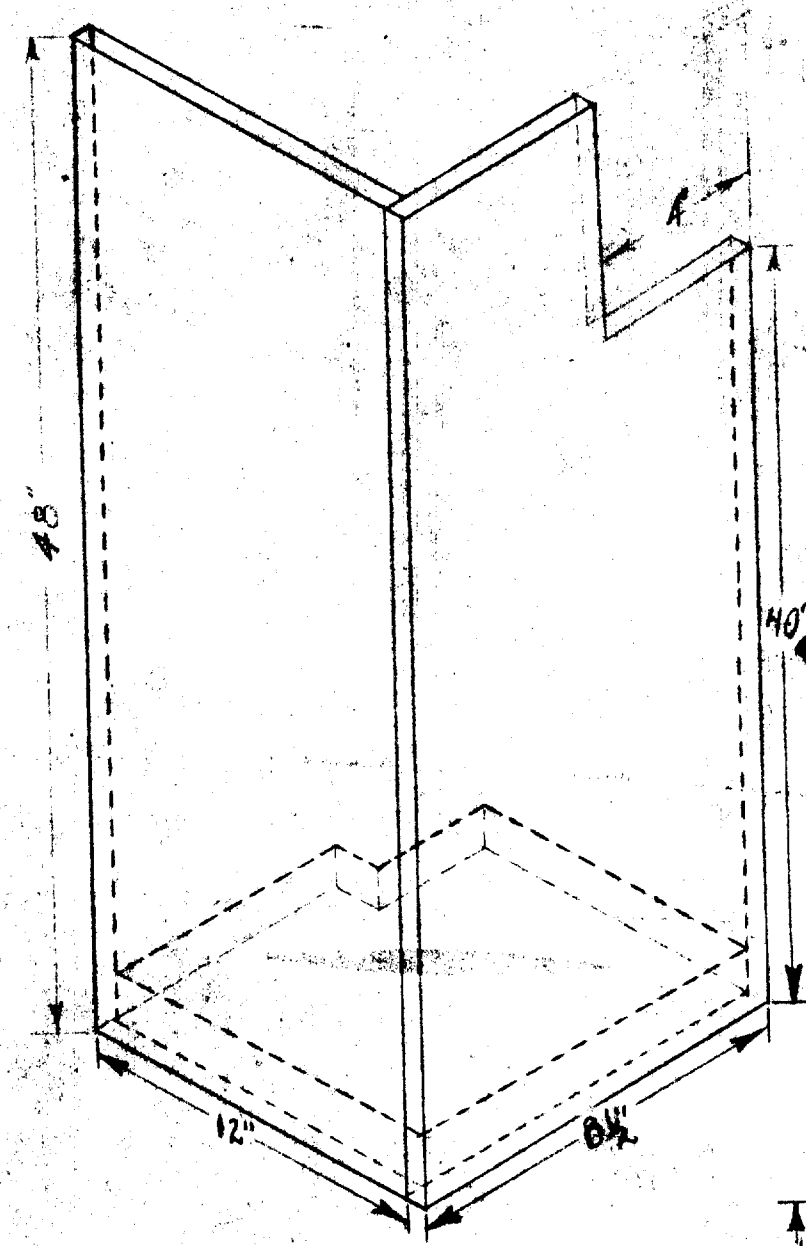

Mat: Sides - ½" ply
Bottom - ¾" ply
Pieces held together with screws.

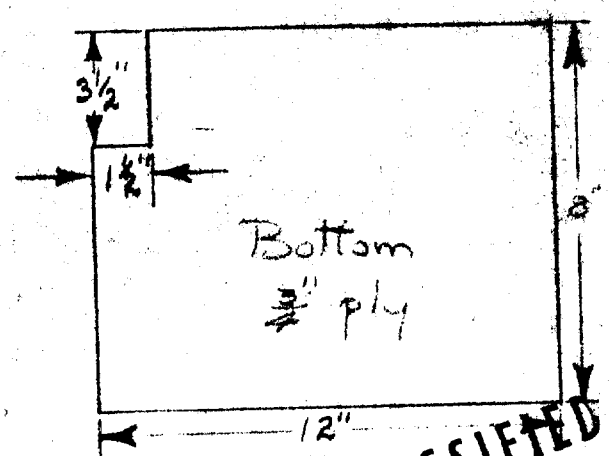

UNCLASSIFIED

CM 5

APPROVED FOR PUBLIC RELEASE

APPROVED FOR PUBLIC RELEASE

Scale - 1" = 6"
27 Mar. - 45

3630

Make From 3/4" Plywood

UNCLASSIFIED

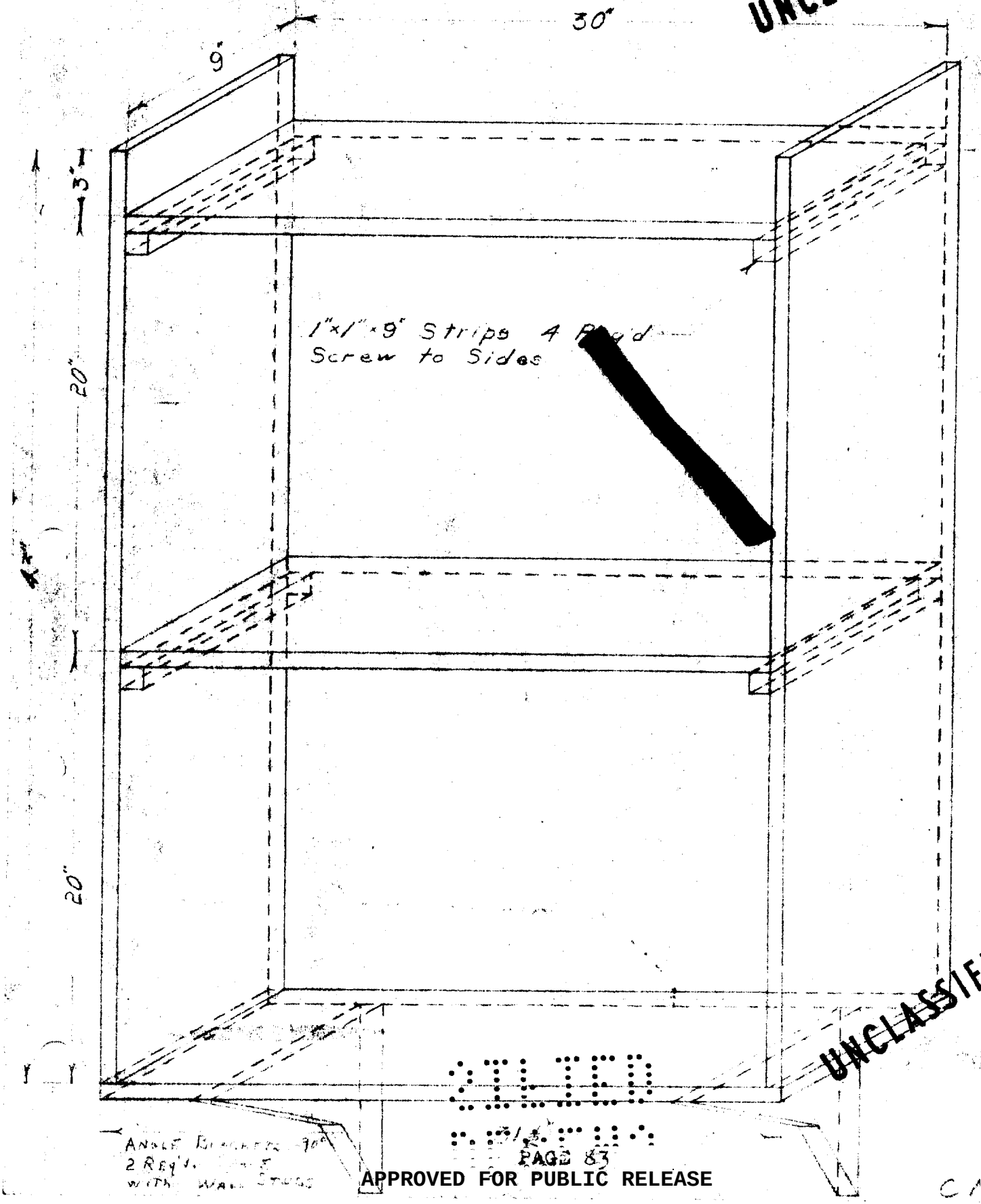

UNCLASSIFIED

APPROVED FOR PUBLIC RELEASE

APPROVED FOR PUBLIC RELEASE

UNCLASSIFIED

ADAPTER FOR FLEXIBLE CABLE

PART 3640

DRILL & TAP 10-24

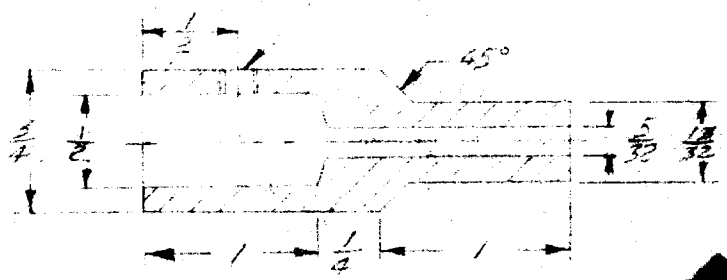

[redacted]

BRASS

UNCLASSIFIED

APPROVED FOR PUBLIC RELEASE

APPROVED FOR PUBLIC RELEASE

DECLAS

AIR MOTOR SUPPORT
PART NO 3230

UNCLASSIFIED

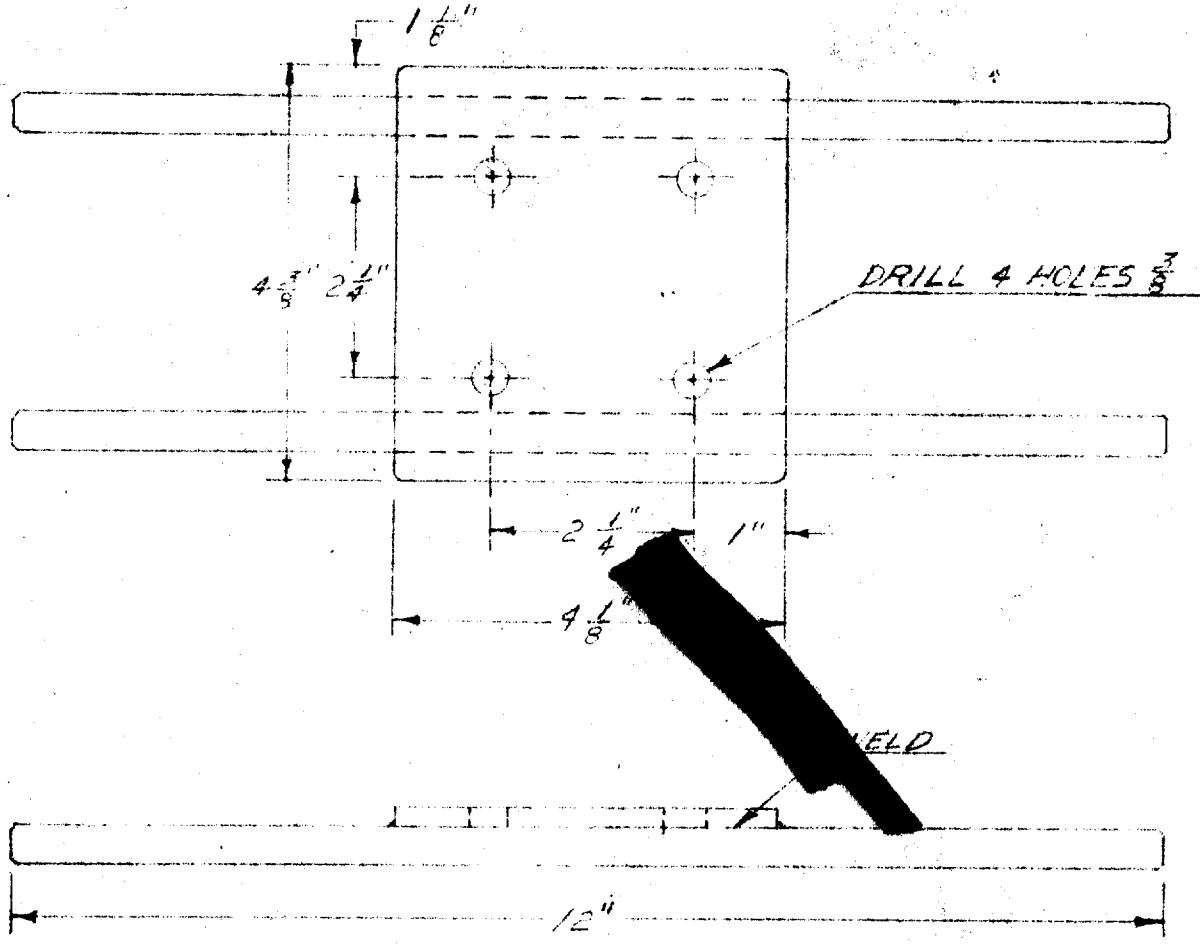

MAT.: 3/16 STEEL
1/2 DIAM. STEEL ROD
MAKE TWO

DECLAS

UNCLASSIFIED

APPROVED FOR PUBLIC RELEASE

APPROVED FOR PUBLIC RELEASE

DECLASSIFIED

UNCLASSIFIED

VALVE HANDLE
3 WAY VALVES
PART 3650

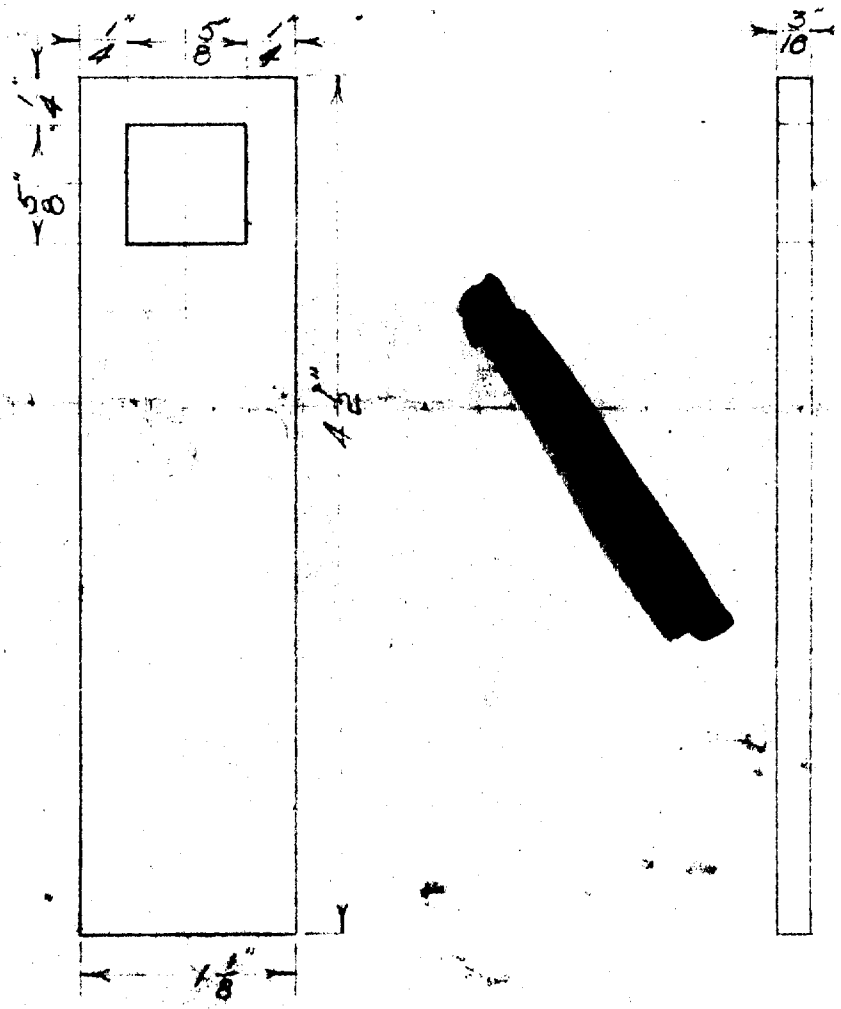

Make From 1 1/8" x 3/16" Strap Iron

DECLASSIFIED

UNCLASSIFIED

30 - Apr. 45.

APPROVED FOR PUBLIC RELEASE

APPROVED FOR PUBLIC RELEASE

UNCLASSIFIED

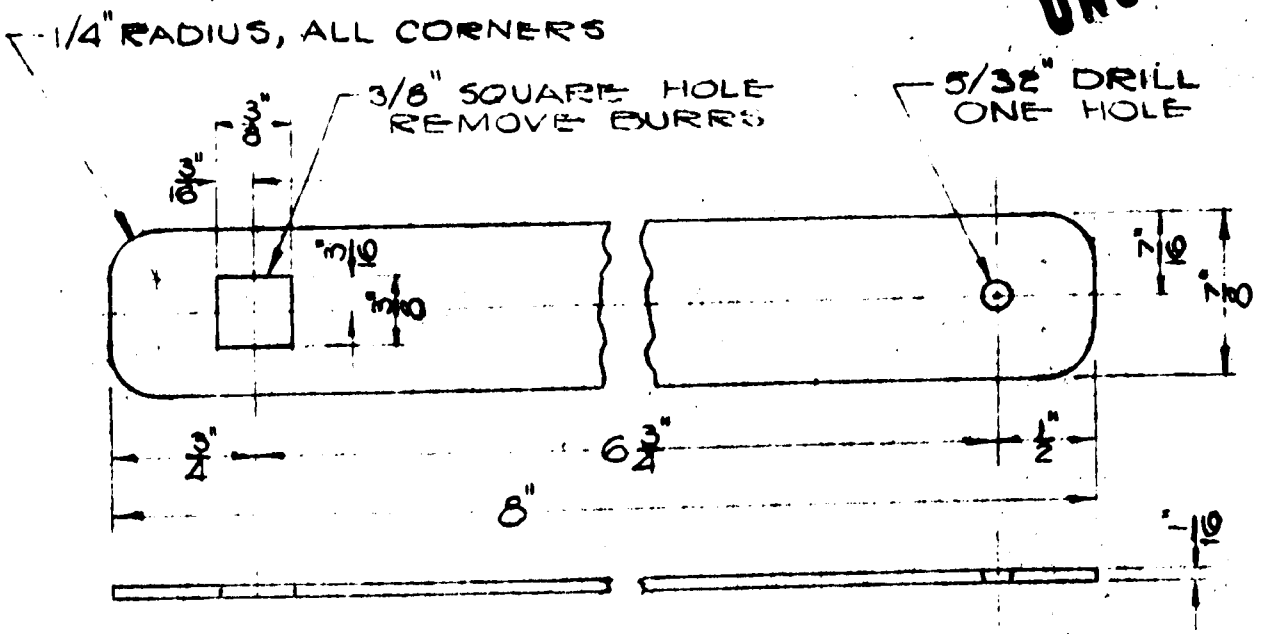

FIRE EXTINGUISHER
HANDLE
MAT'L.- BRASS
PART: 3660 - part No

		APPROVED FOR CONST.						
		CHIEF ENG.						
		PROJ. ENG.						
		CHECKED	CmT	4-9-45				
LOWE	CM-5	DRAWN	RKW	4-9-45				
GROUP REPR.	GROUP NO.	LAYOUT OR SKETCH						
FINISHES: A GROUND, B SMOOTH MACHINE, C ROUGH MACHINE			INITIALS	DATE	REV. LET.	CHANGED ITEM WAS	DATE	BY
		CALC. WT. #			ADDITIONAL SHEETS		SHEET SIZE A	
		ACT. WT. #					NO. 1A	
TOLERANCE EXCEPT AS NOTED							TOTAL 1	
FRACTIONAL ±1/64		SUPERSEDES			MODEL or TITLE	DRAWING NO.		
ANGLES ±1/2°					FIRE EXTINGUISHER HANDLE	Y-5032		
SHEET METAL ±1/32		SUPERSEDED BY					SCALE FULL	
DECIMALS NOTED								

DIETZGEN 107 BRISTOL

JAN. 57

UNCLASSIFIED

APPROVED FOR PUBLIC RELEASE

APPROVED FOR PUBLIC RELEASE

UNCLAS

BOTTOM ASSEMBLY REAGENT Res. HOLDER

PART 3710

UNCLASSIFIED

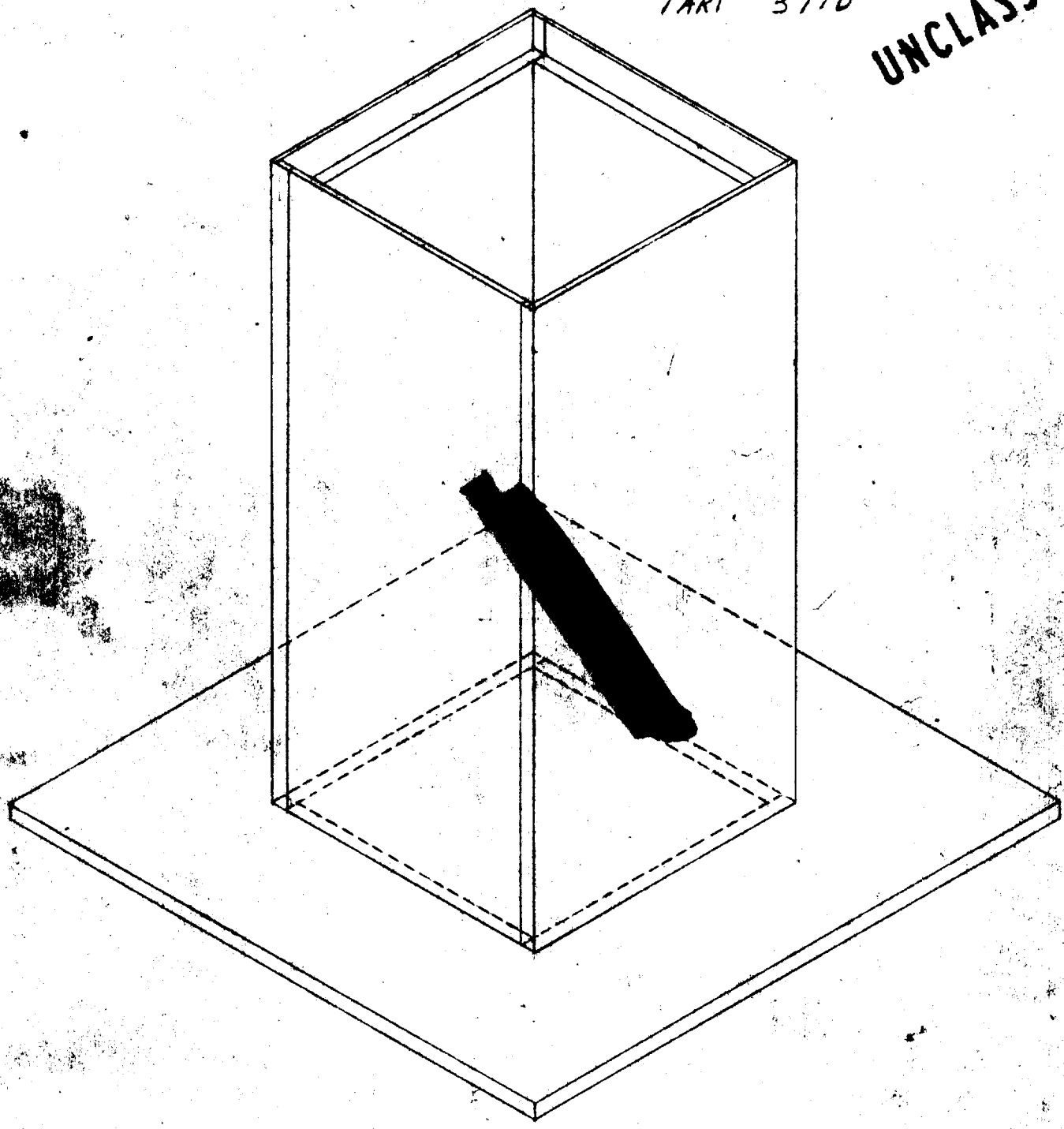

Parts held together with screws. Joints Glued.

UNCLASSIFIED

FILED

APPROVED FOR PUBLIC RELEASE

APPROVED FOR PUBLIC RELEASE

UNCLASSIFIED

BOTTOM: REAGENT RES. HOLDER
PART 3710

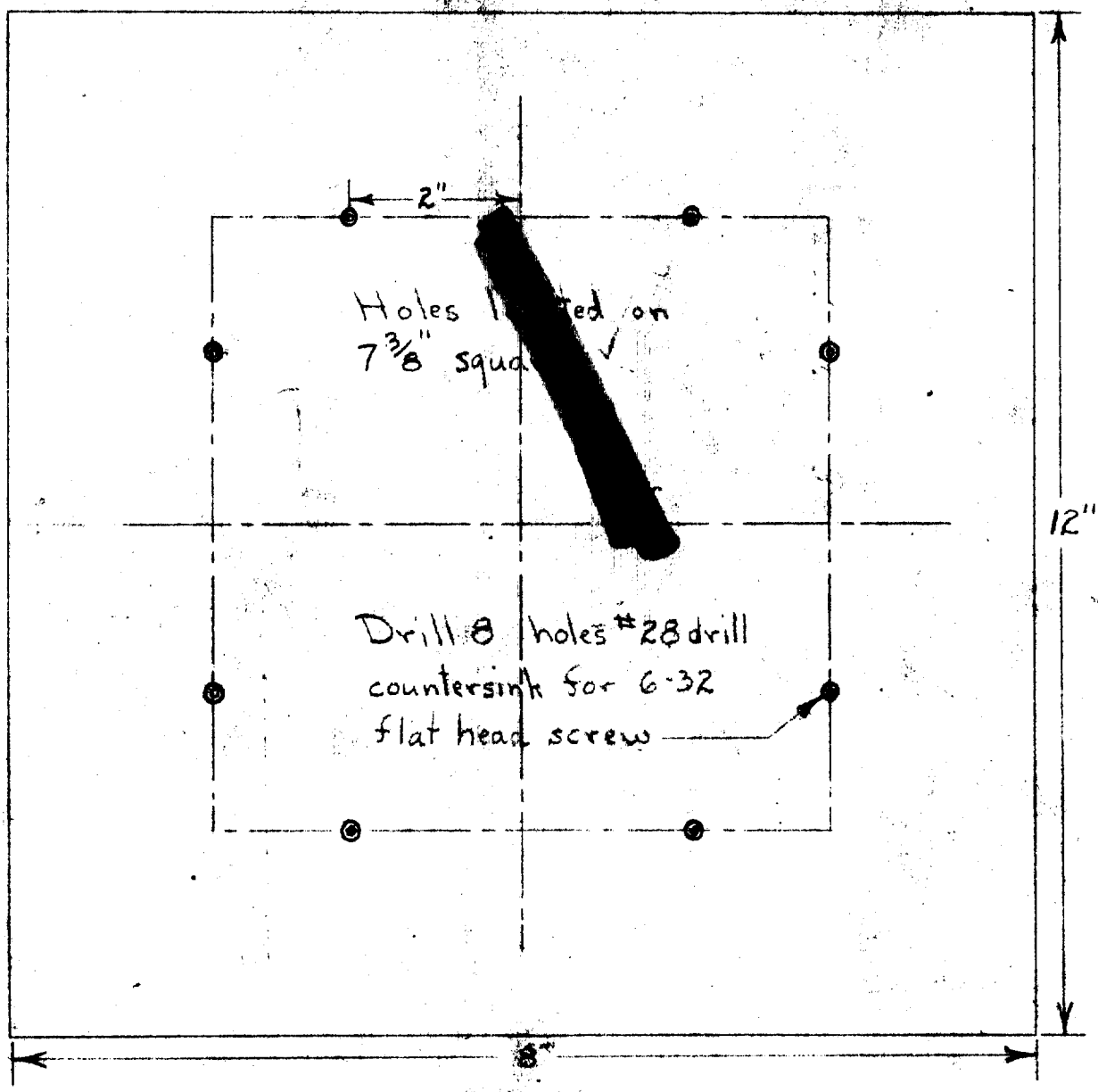

Mat: 3/8" Lucite - 1 req'd.

UNCLASSIFIED

Note: Change in dimension would change this drawing and the assembly. Will not change the centers on which holes are located from center of pc.

APPROVED FOR PUBLIC RELEASE

APPROVED FOR PUBLIC RELEASE

UNCLASSIFIED

Front & Back Panel Assembly:

PART 3710

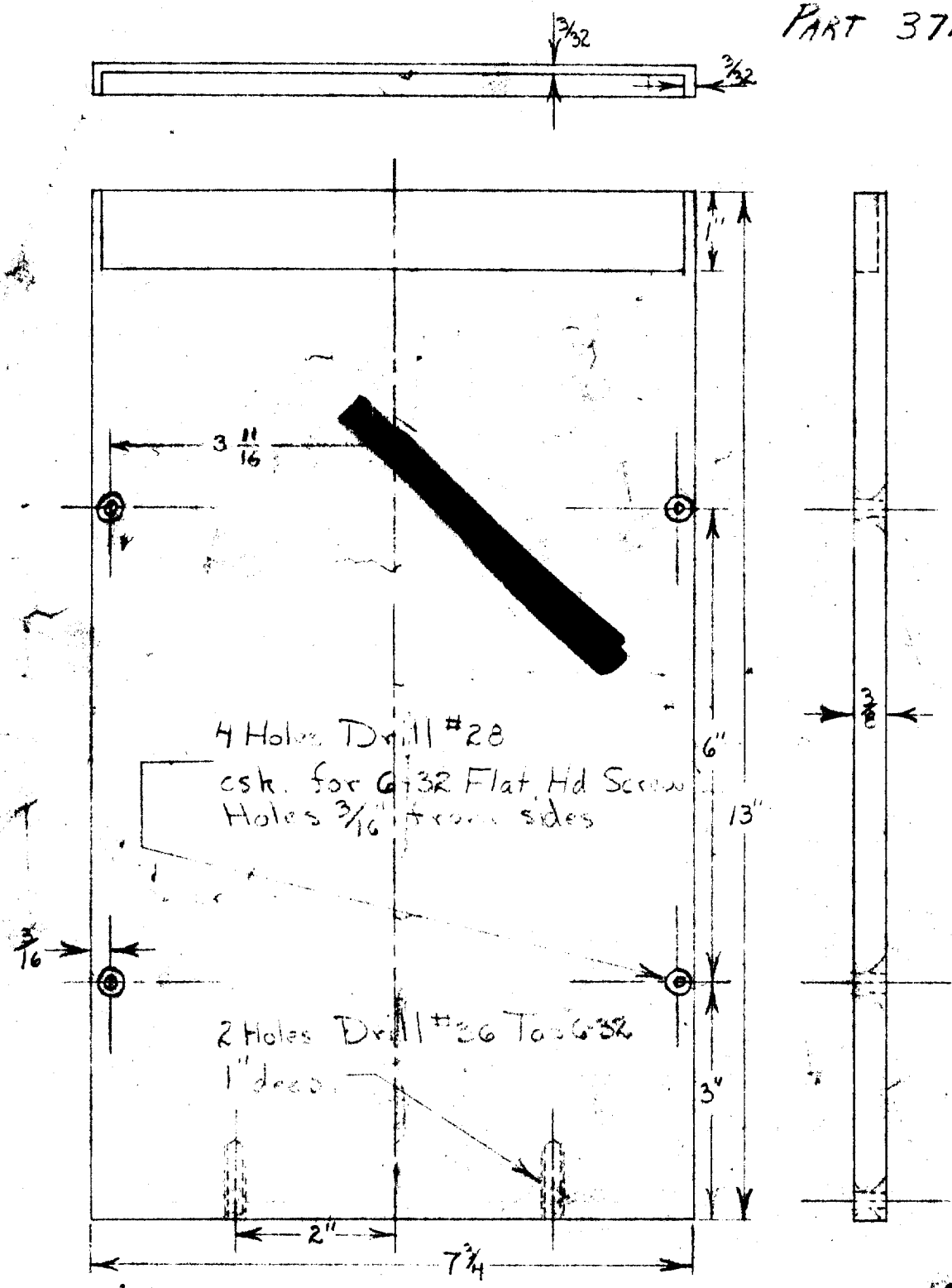

Mat'l 3/8 Lucite - 2 pcs req'd.

UNCLASSIFIED

APPROVED FOR PUBLIC RELEASE

APPROVED FOR PUBLIC RELEASE

UNCLASSIFIED

SIDES FOR BOTTOM ASSEMBLY
REAGENT RES. HOLDER
PART 3710

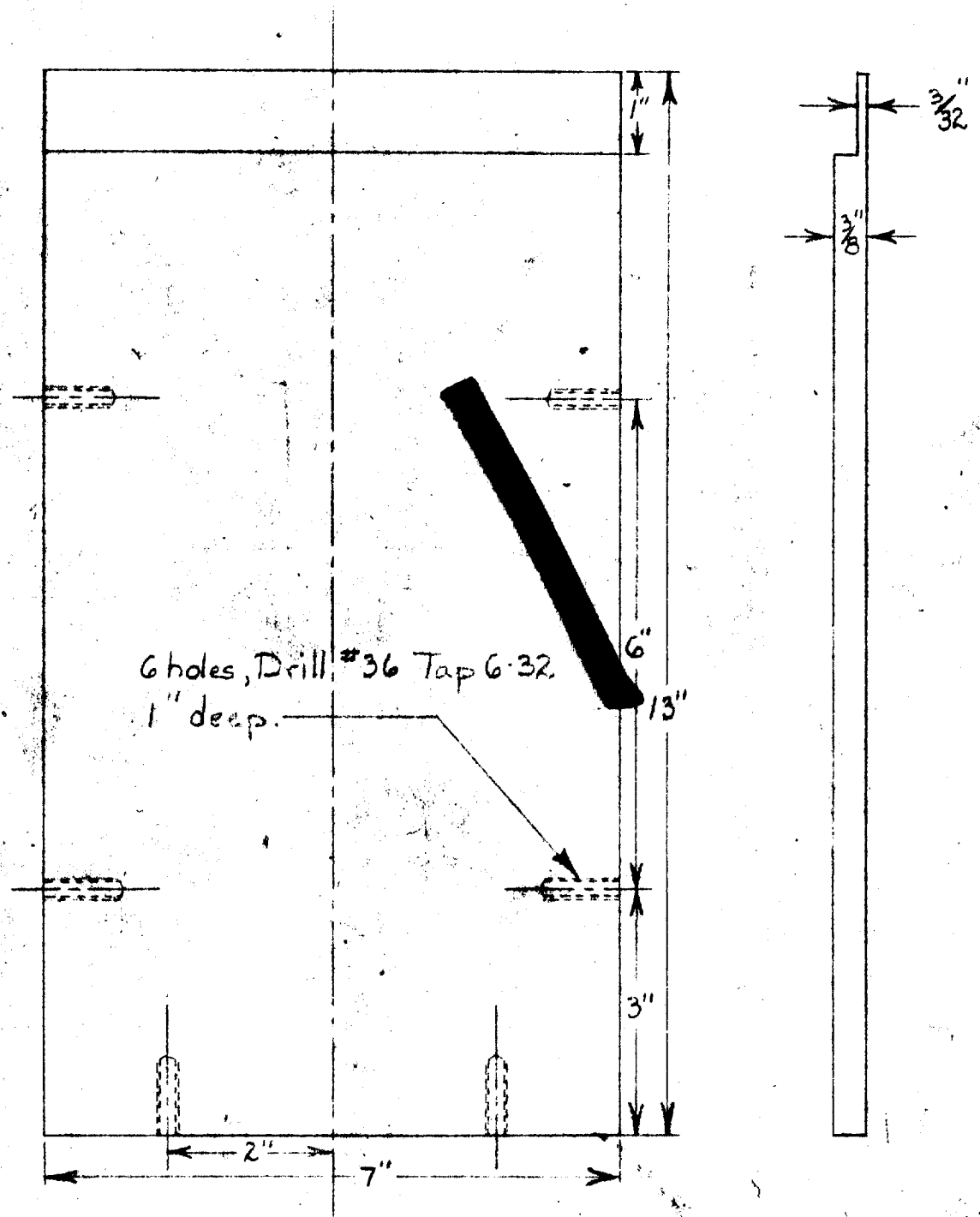

Mat: 3/8" Lucite - 2 req'd.

UNCLASSIFIED

APPROVED FOR PUBLIC RELEASE

APPROVED FOR PUBLIC RELEASE

REAGENT RES. HOLDER

PART 3710

UNCLASSIFIED

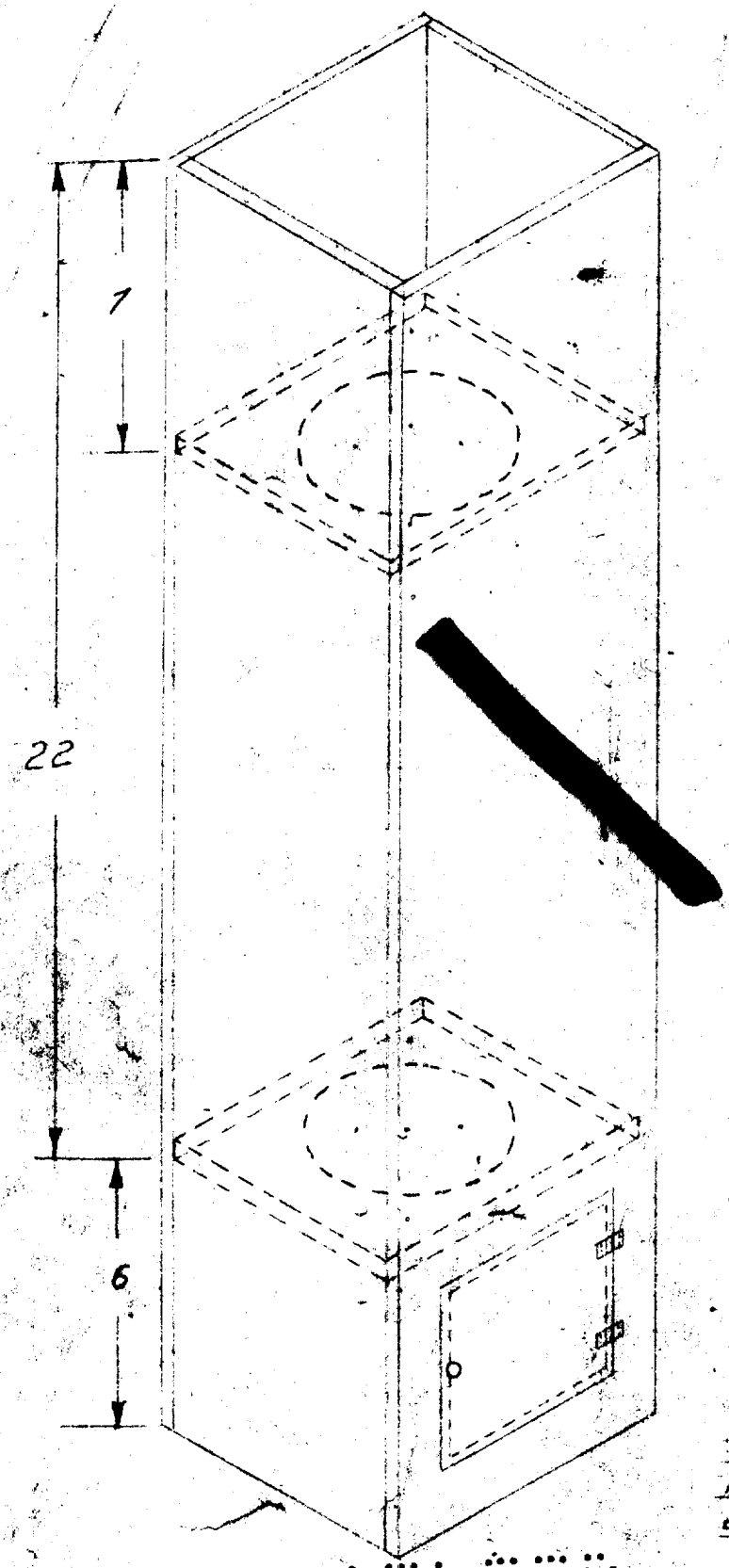

[redacted]

UNCLASSIFIED

PARTS HELD TOGETHER WITH SCREWS
JOINTS GLUED

TOP ASSEMBLY

APPROVED FOR PUBLIC RELEASE

APPROVED FOR PUBLIC RELEASE

UNCLASSIFIED

REAGENT RES. HOLDER
PART 3710

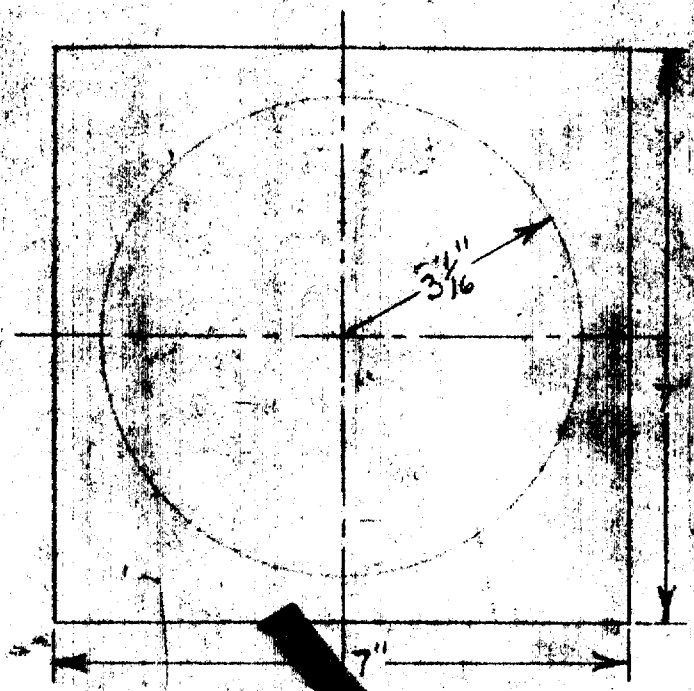

Mat: 1/4" Lucite
1 Req'd.

Note: Do not glue this piece in place

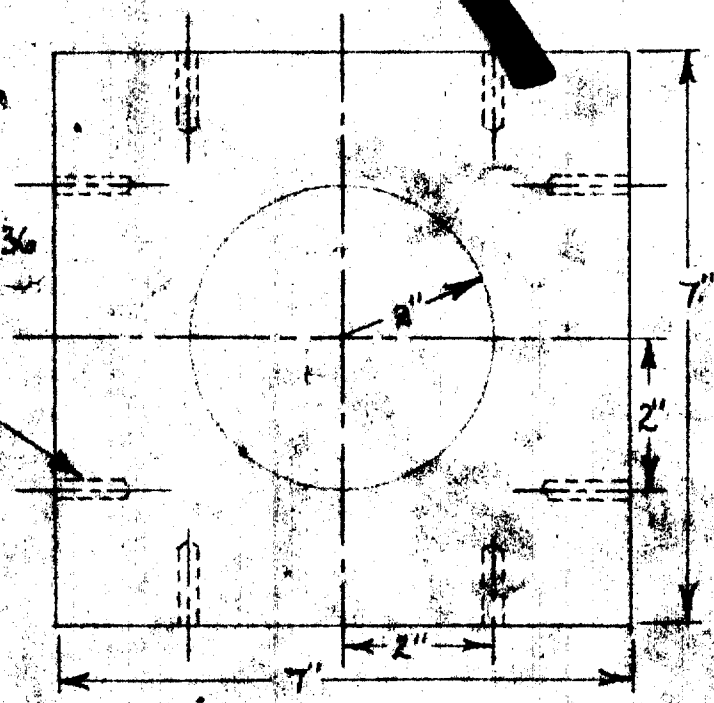

Drill #36
Tap 6-32
1" Deep

Mat: 3/8" Lucite
1 Req'd.

UNCLASSIFIED

APPROVED FOR PUBLIC RELEASE

APPROVED FOR PUBLIC RELEASE

UNCLASSIFIED

REAGENT RES. HOLDER

BACK AND FRONT FOR TOP ASSEMBLY

BACK PART 3710 FRONT

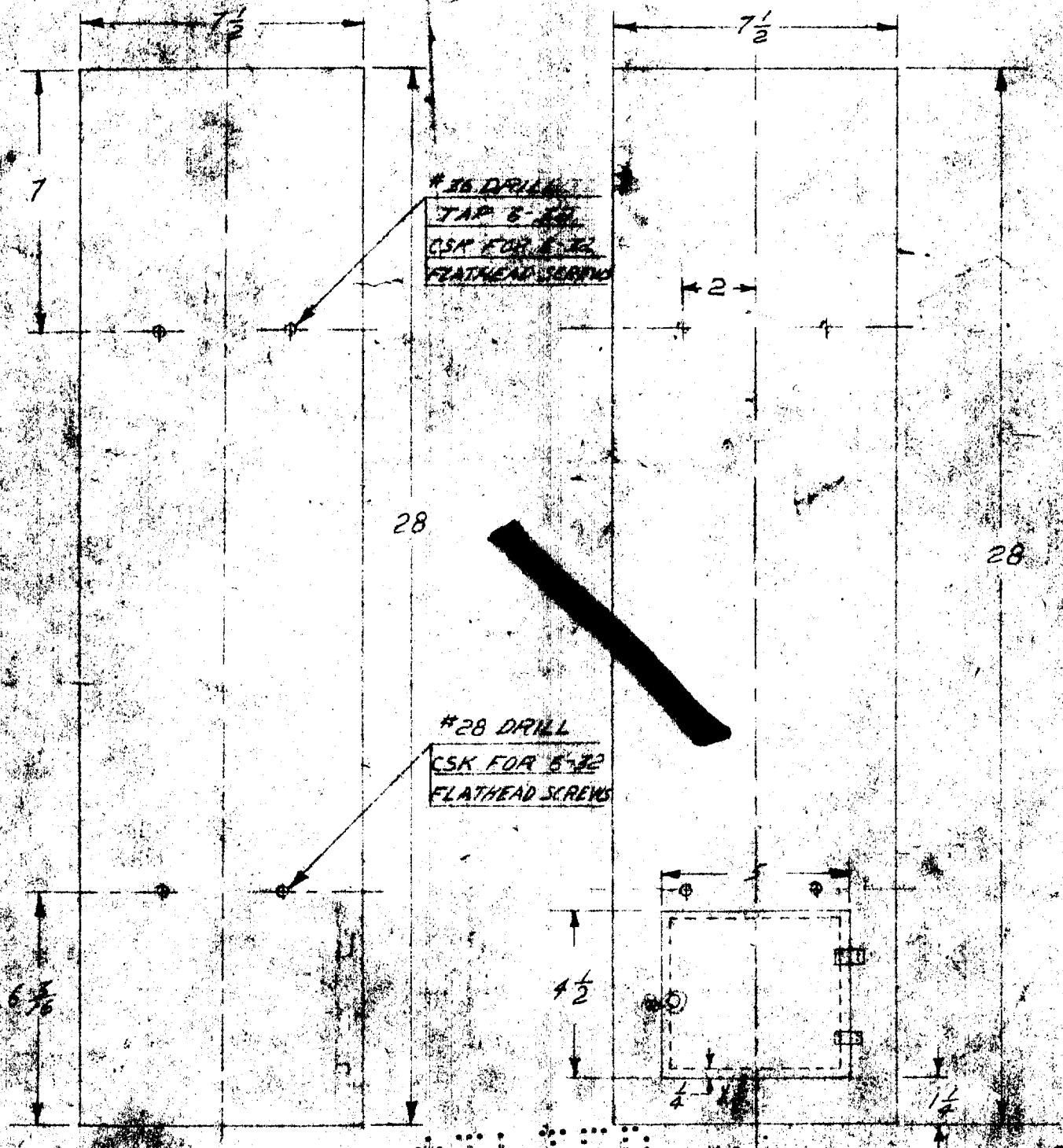

¼" LUCITE

UNCLASSIFIED

APPROVED FOR PUBLIC RELEASE

APPROVED FOR PUBLIC RELEASE

UNCLASSIFIED

REAGENT RES. HOLDER
PART 3710

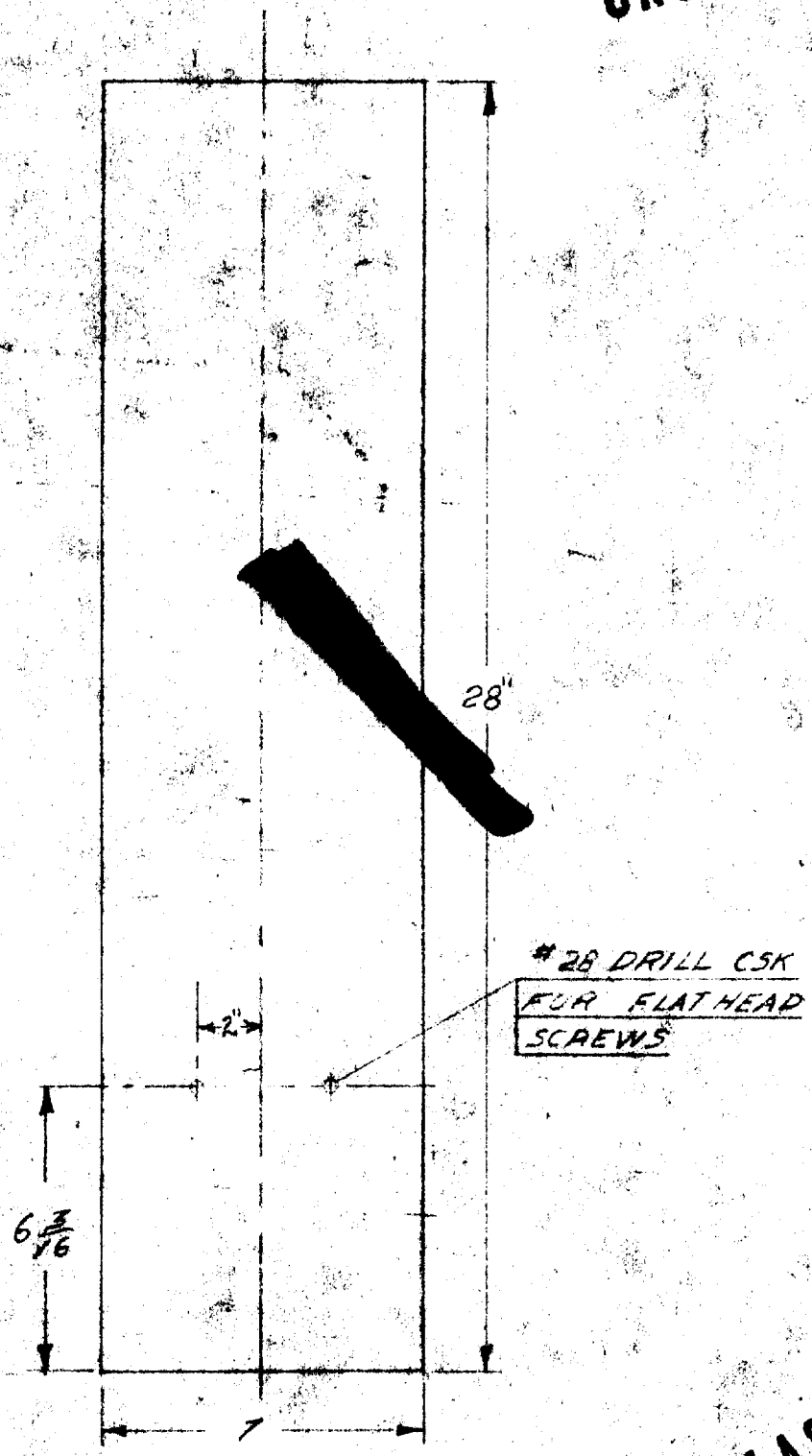

UNCLASSIFIED

SIDES FOR TOP ASSEMBLY

1/4" LUCITE
2 REQUIRED
SCALE 1/4" = 1

APPROVED FOR PUBLIC RELEASE

APPROVED FOR PUBLIC RELEASE

Cover Sheet for Drawing

UNCLASSIFIED

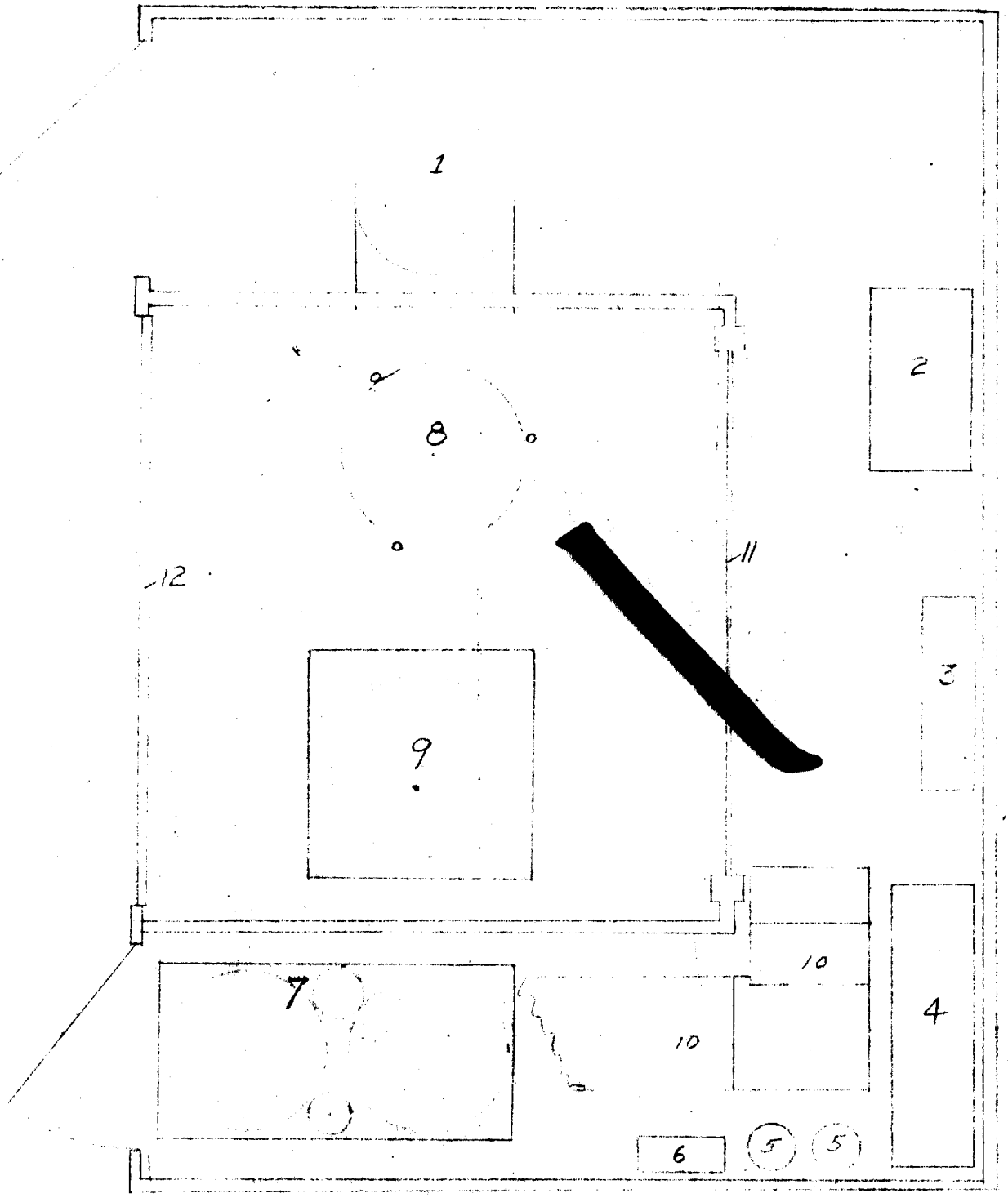

1. Ventilating Duct
2. Circulating Pump
3. Resistance Thermometer
4. Solution Shelf
5. CO_2 Cylinders
6. Coolant Reservoir
7. Supernatant Bottles in Dolly
8. Boiler (suspended)
9. Extractor on Support Block
10. Steps and Platform
11. Window
12. Removable Partition

UNCLASSIFIED

APPROVED FOR PUBLIC RELEASE

10-24-45 ACB

APPROVED FOR PUBLIC RELEASE

UNCLASSIFIED

EQUIPMENT PLACEMENT IN HOOD

UNCLASSIFIED

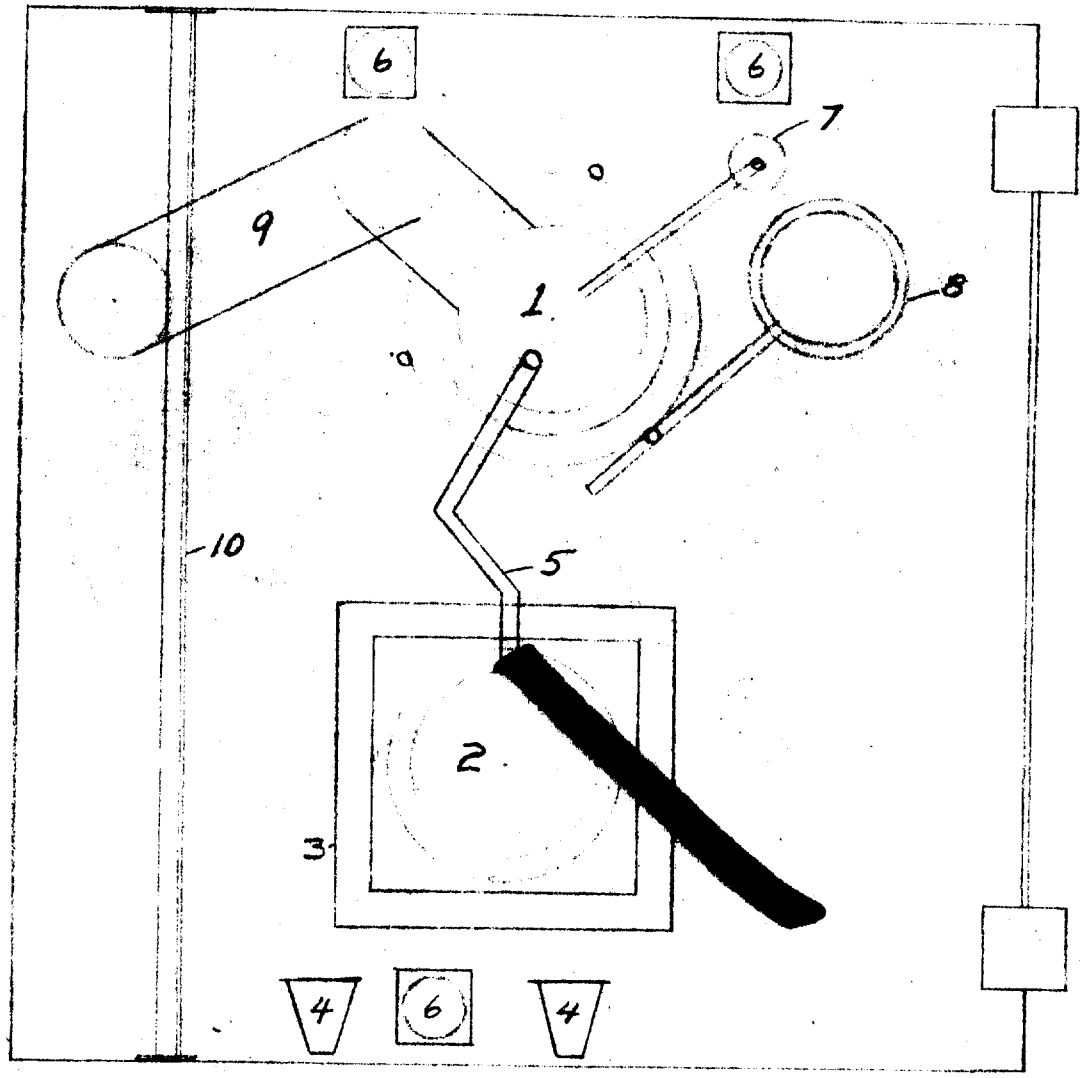

1. Boiler
2. Extractor
3. Support Block
4. Nozzles(CO_2 system)
5. Boiler Introducer Tube
6. Wolff Bottles
7. Transfer Apparatus
8. Transfer Bottle Holder
9. Ether Vapor Tube
10. Angle Iron Support

UNCLASSIFIED

UNCLASSIFIED

APPROVED FOR PUBLIC RELEASE 10-25-45 JOB

APPROVED FOR PUBLIC RELEASE

HOOD TOP - PLACEMENT

UNCLASSIFIED

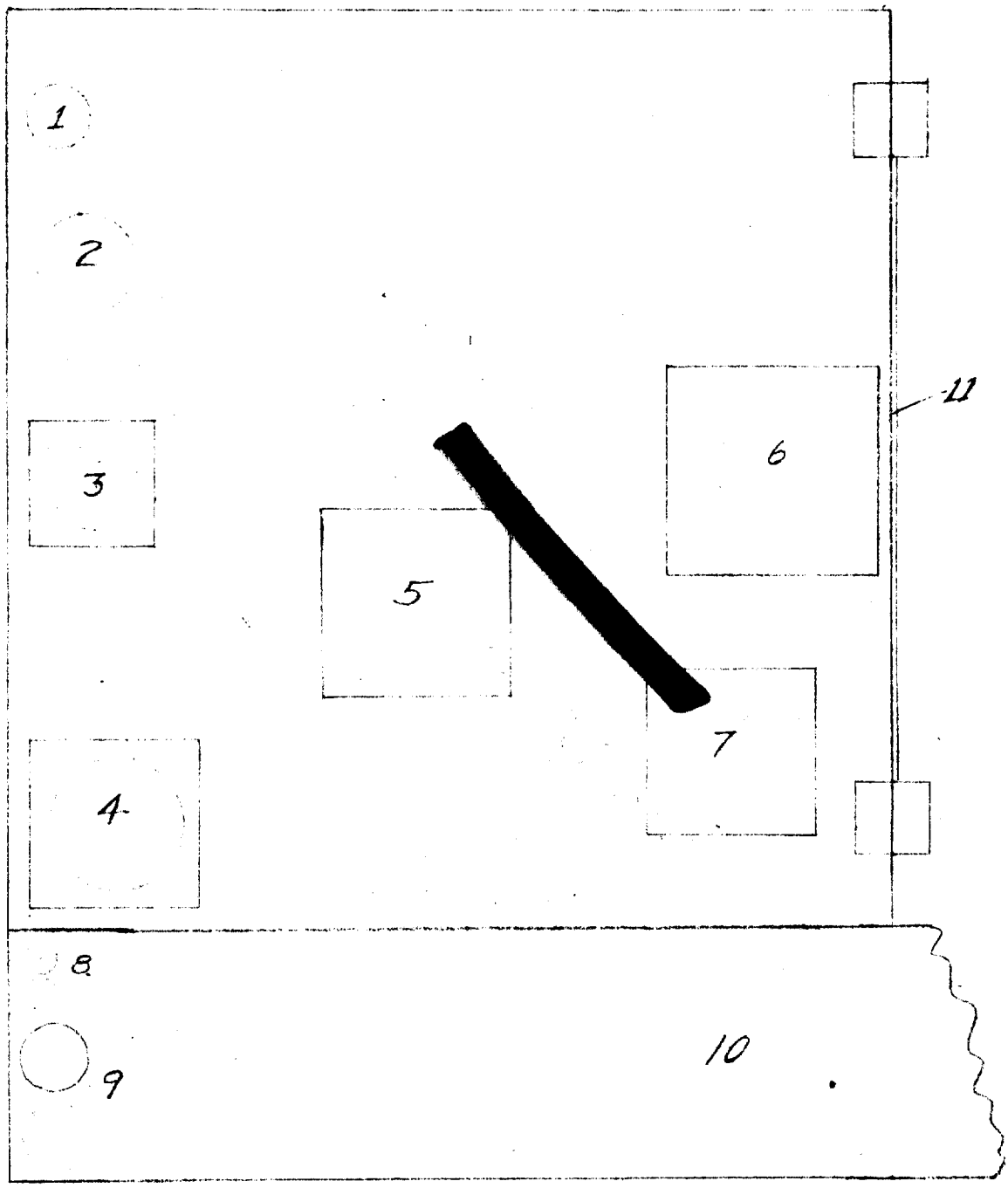

1. Vapor Safety Tube
2. Condenser
3. HNO_3 Reservoir
4. Ether Reservoir
5. Trap Door
6. Reagent Reservoir
7. Window
8. Line Traps
9. Bubblers
10. Platform
11. Hood Window

UNCLASSIFIED

APPROVED FOR PUBLIC RELEASE 10-25-45 JCB.

APPROVED FOR PUBLIC RELEASE

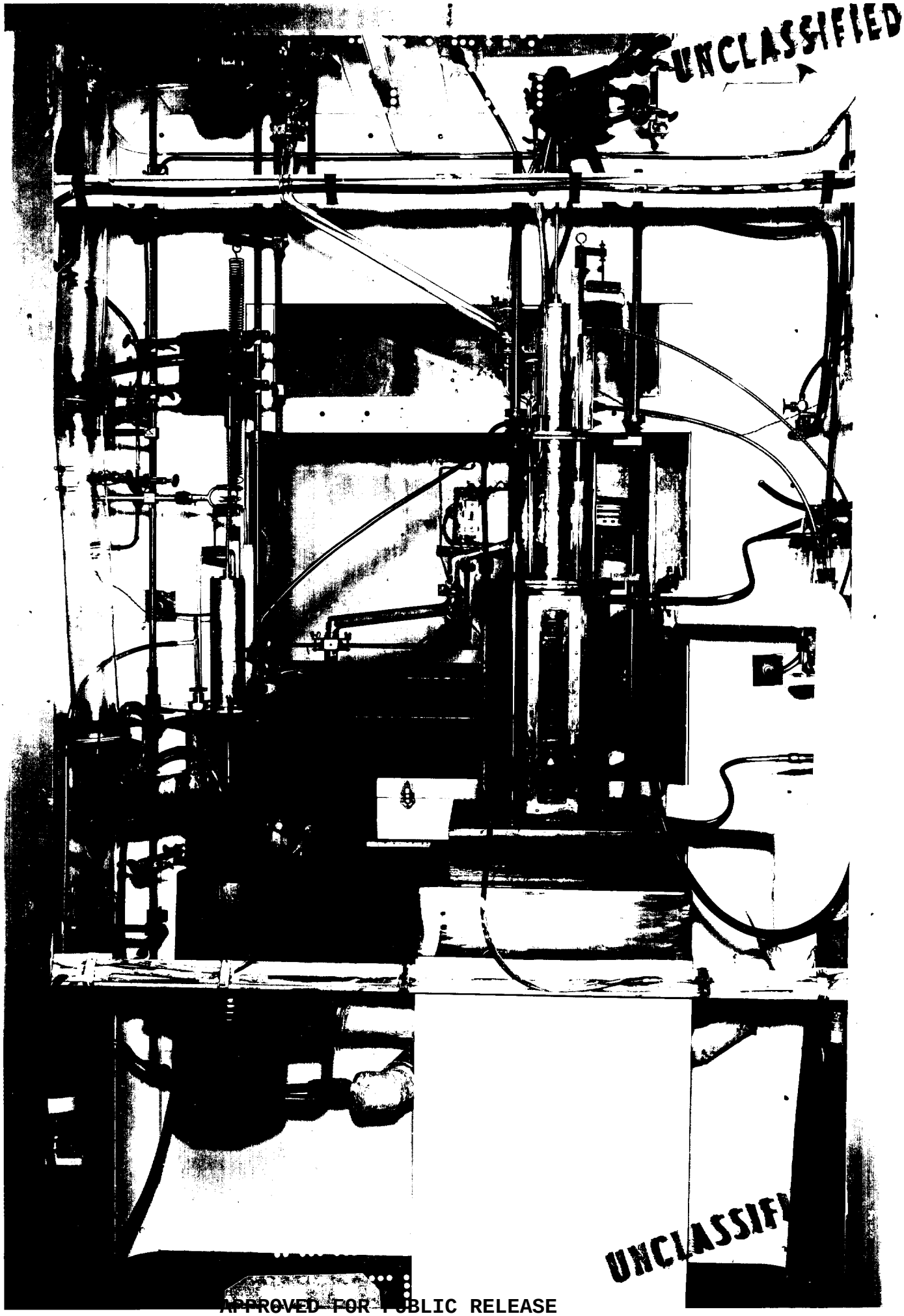

APPROVED FOR PUBLIC RELEASE

APPROVED FOR PUBLIC RELEASE

UNCLASSIFIED

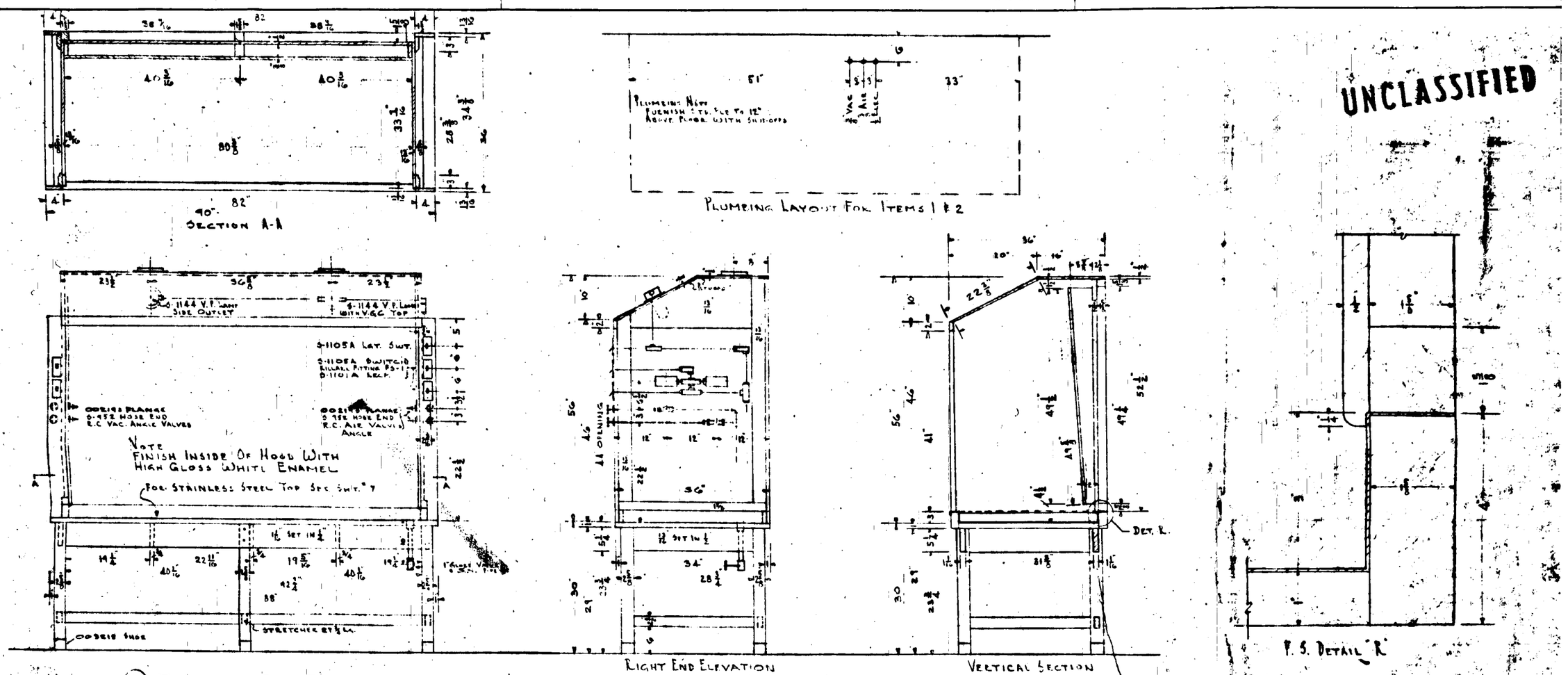

ITEM (1) TWO TYPE R.C FUME HOODS AS SHOWN

UNCLASSIFIED

TERIAL HARDWOOD

GRAY	PLANNING FIXTURES	Br. Brass	BLUE PRINTS						REVISIONS						CUSTOMER	ORDER NUMBER	DRAWN	Miller	DATE	SCALE	SHEET
	HARDWARE		PRINTED	COPIES	PURPOSE	PRINTED	COPIES	PURPOSE	REVISED	DATE	CHECK	REVISED	DATE	CHECK		W-3338	CHECK				7
																	DETAIL				
																	CHECK				

KEWAUNEE MANUFACTURING COMPANY
Adrian, Michigan

APPROVED FOR PUBLIC RELEASE

APPROVED FOR PUBLIC RELEASE

UNCLASSIFIED

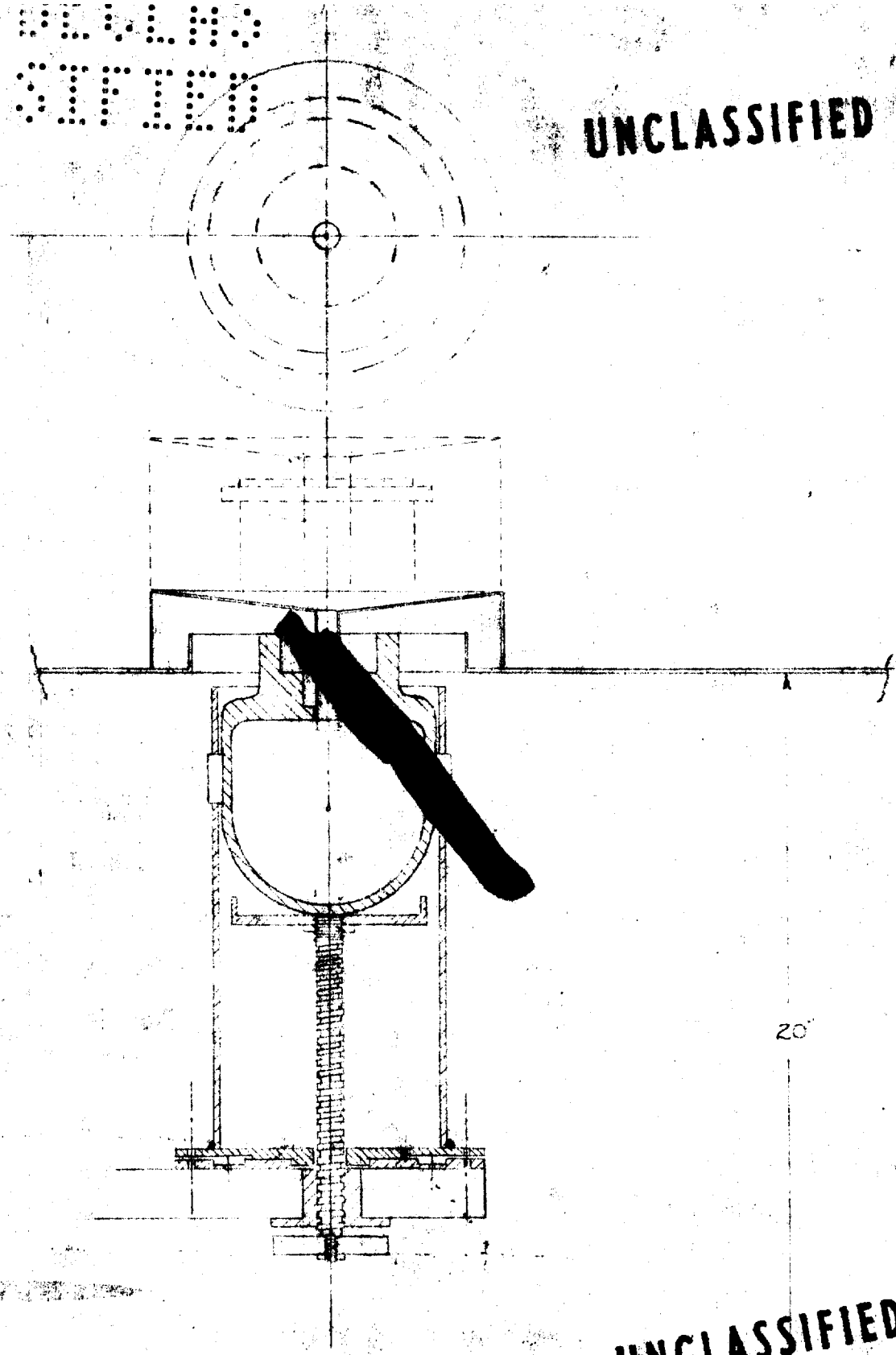

UNCLASSIFIED

Rough Cut Approximate Part 4120 Scale ½ Size

Bomb Mounts Assembly

APPROVED FOR PUBLIC RELEASE

APPROVED FOR PUBLIC RELEASE

UNCLASSIFIED

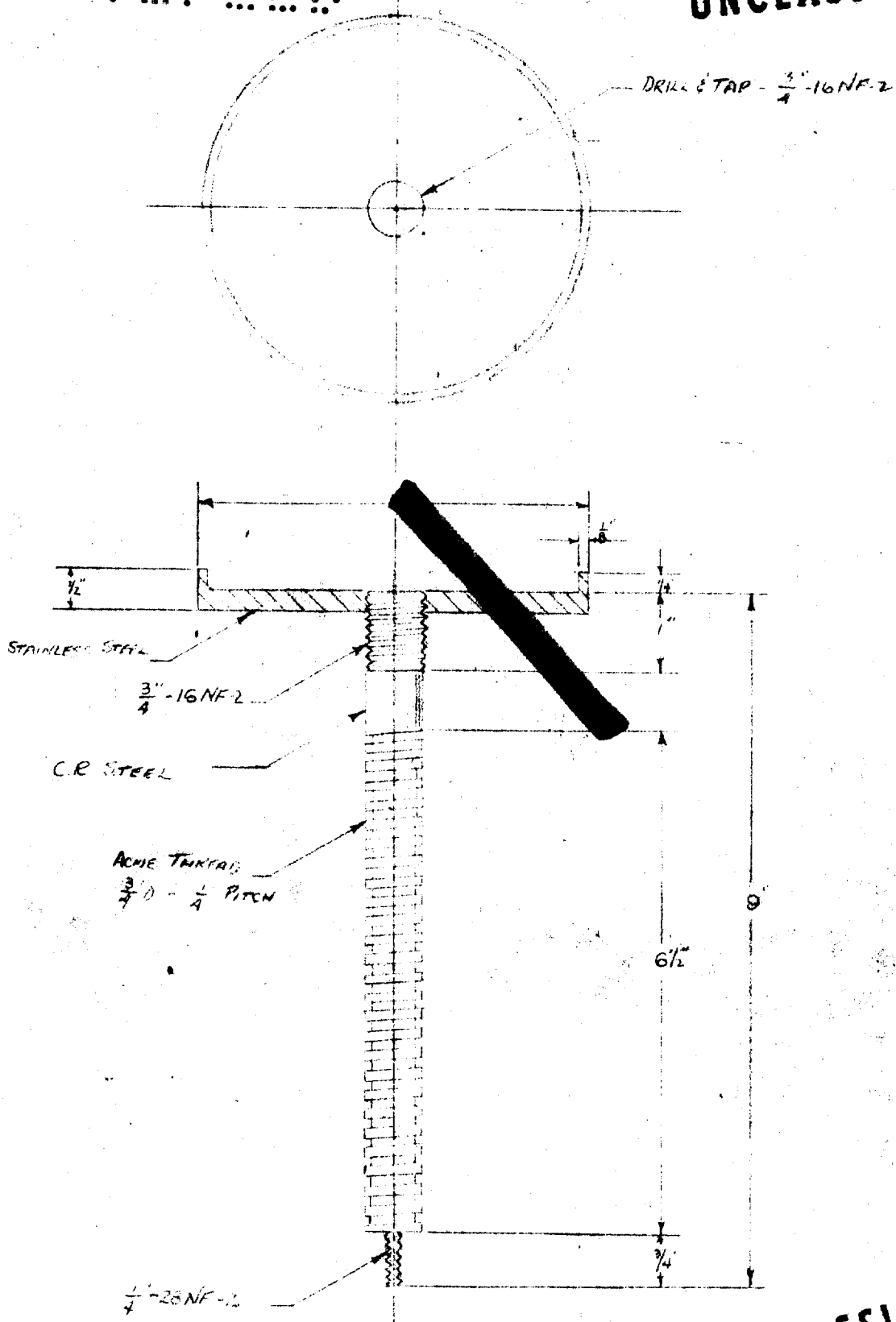

UNCLASSIFIED

ROUGH CUT. R BOTTLE HOLDER & MOUNTING SCREW PART 4110-D

APPROVED FOR PUBLIC RELEASE

APPROVED FOR PUBLIC RELEASE

UNCLASSIFIED

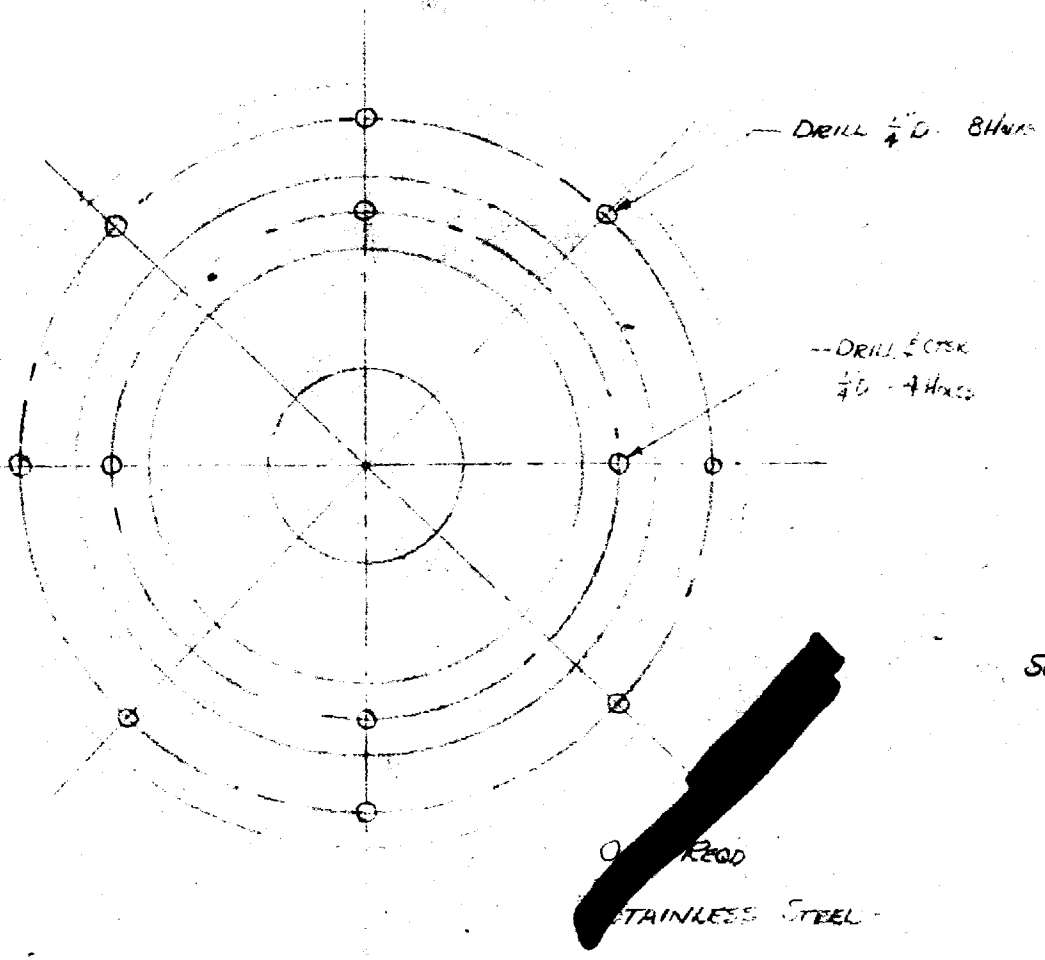

BOMB HOLDER - BASE PLATE

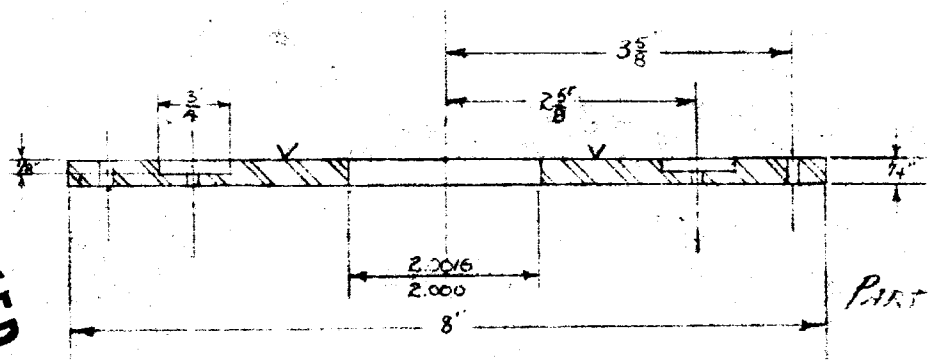

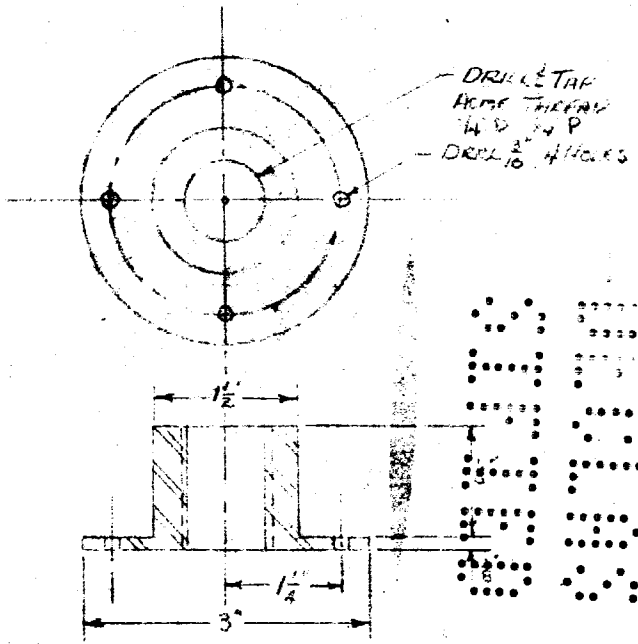

SCREW BUSHING - ONE REQD - STAINLESS STEEL

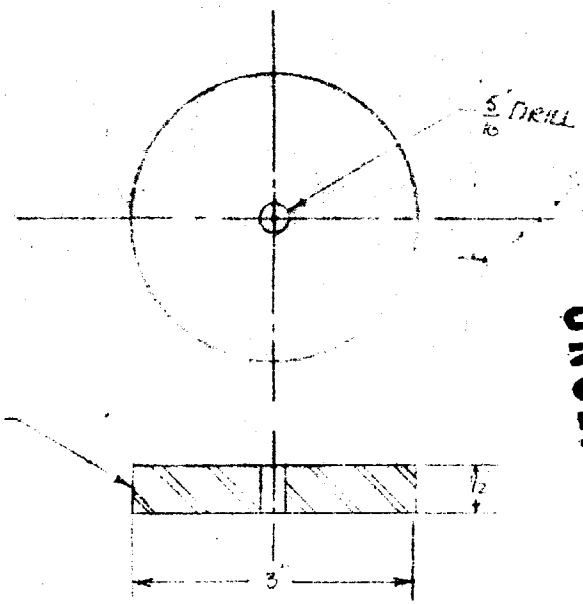

PART 4110-A SCREW CONTROL WHEEL
ONE REQD - STAINLESS STEEL

SCALE 1/2 SIZE

5/9/45 FCT

UNCLASSIFIED

APPROVED FOR PUBLIC RELEASE

APPROVED FOR PUBLIC RELEASE

UNCLASSIFIED

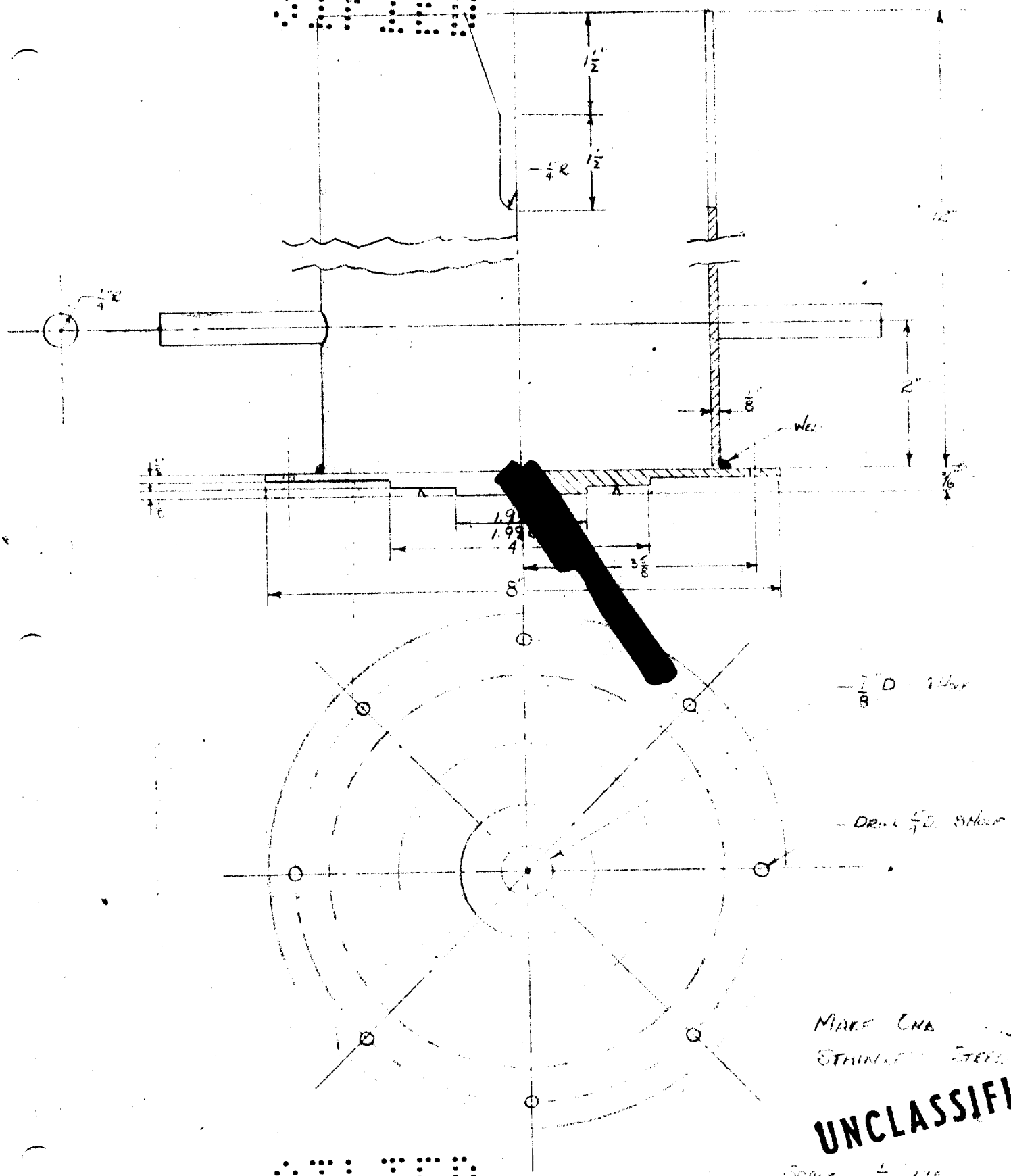

MAKE ONE
STAINLESS STEEL

UNCLASSIFIED

SCALE ½ FULL

ROUGH CUT - BORE HOLES & TAPERS

PART 4110-B

KCT

APPROVED FOR PUBLIC RELEASE

APPROVED FOR PUBLIC RELEASE

UNCLASSIFIED

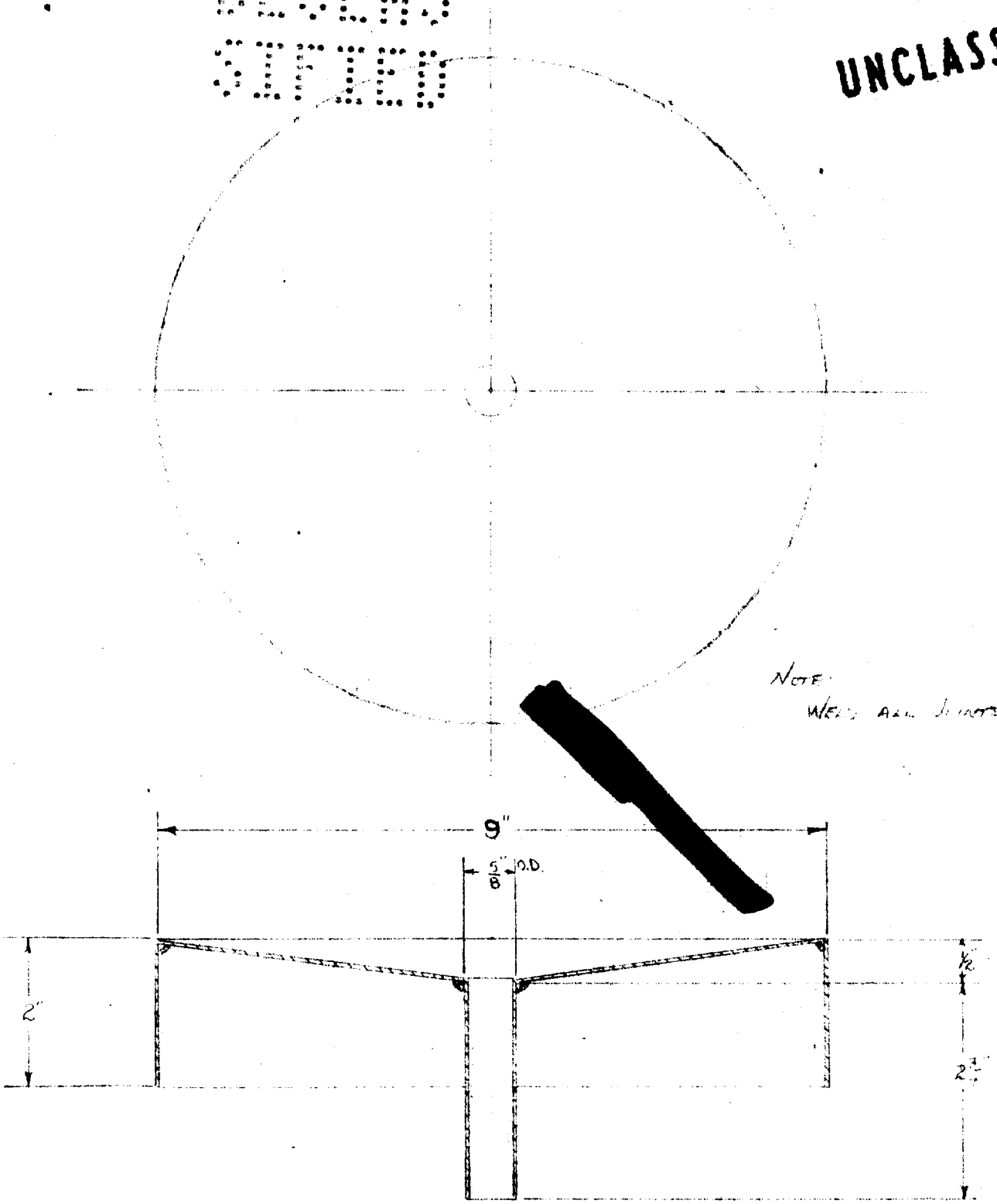

NOTE:
WELD ALL JOINTS

MAKE ONE
STAINLESS STEEL, 18 GA., QUOTE

Rough Cut
Splash Cap for Bomb

PART 4110-C

UNCLASSIFIED

APPROVED FOR PUBLIC RELEASE

5/8/45 F.T.

APPROVED FOR PUBLIC RELEASE

UNCLASSIFIED

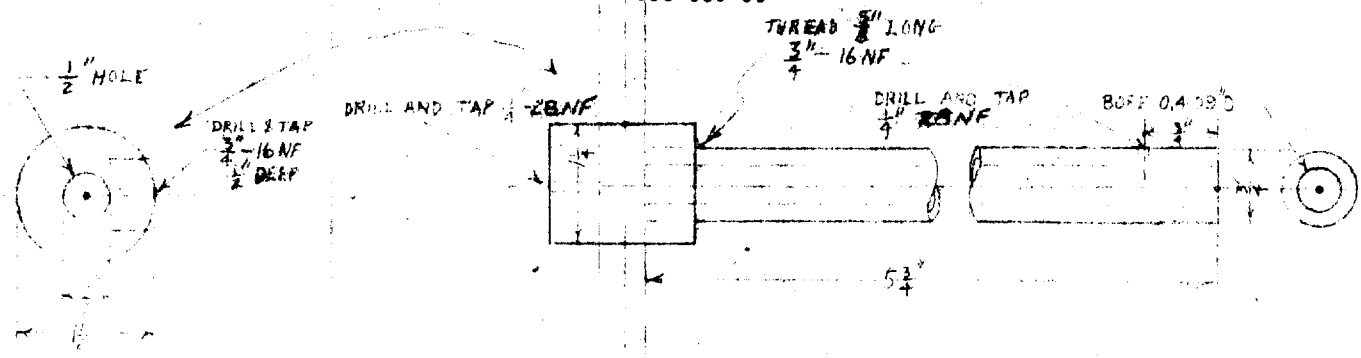

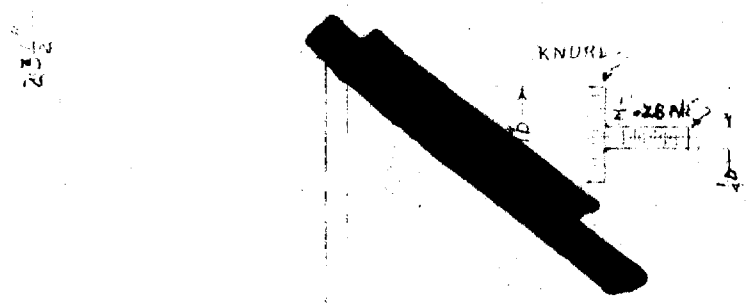

STAINLESS STEEL

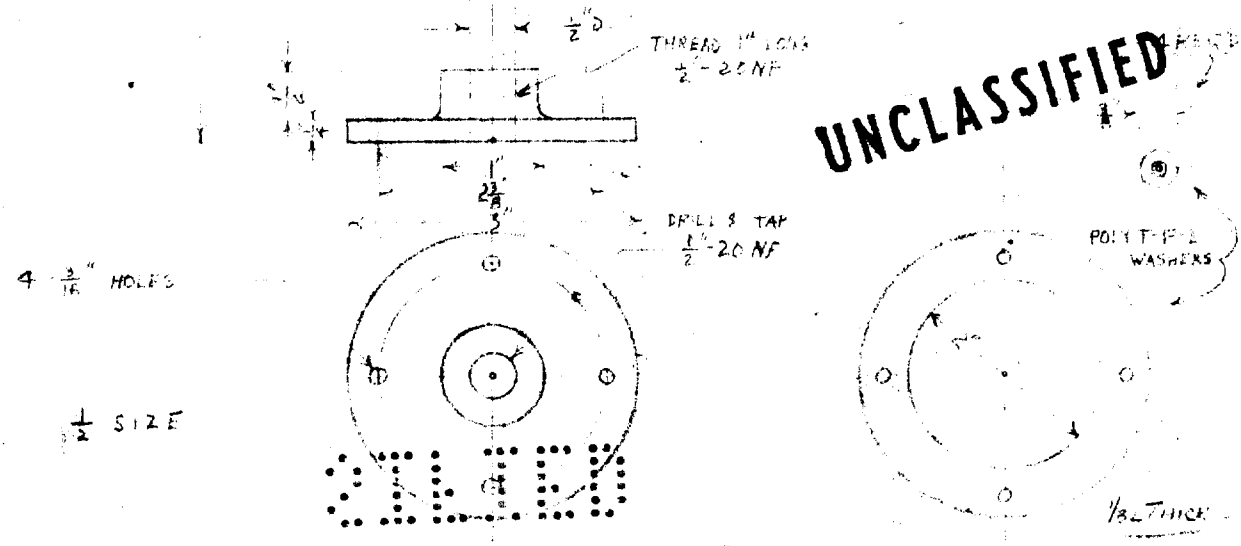

UNCLASSIFIED

5-8-45 WJH STIRRER SUPPORT PART 4120

APPROVED FOR PUBLIC RELEASE

APPROVED FOR PUBLIC RELEASE

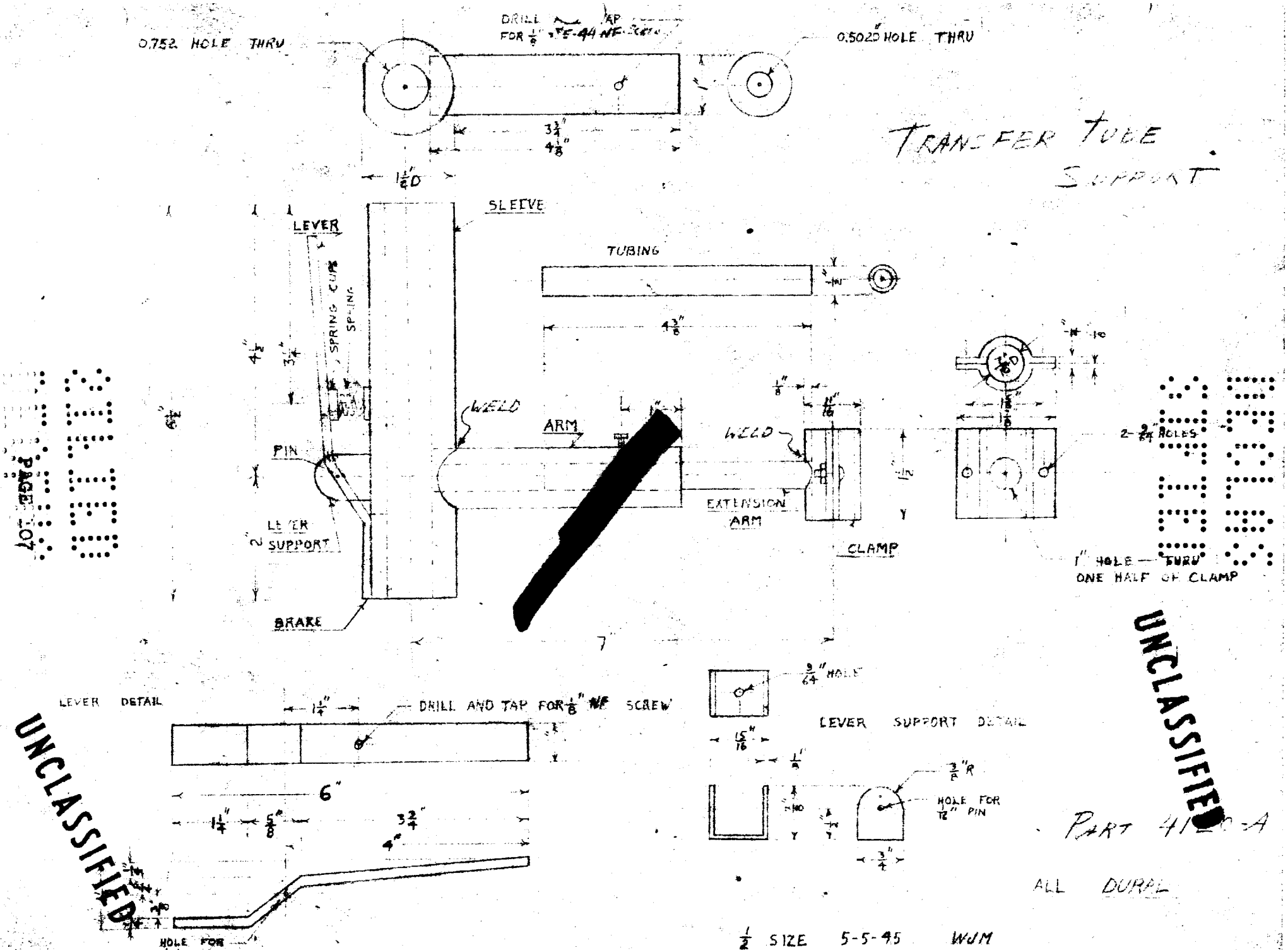

APPROVED FOR PUBLIC RELEASE

APPROVED FOR PUBLIC RELEASE

SLEEVE DETAIL

PART 4120 - A

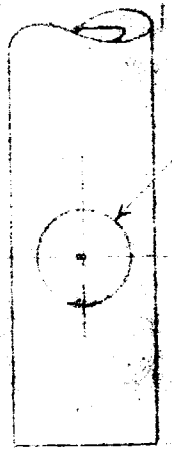

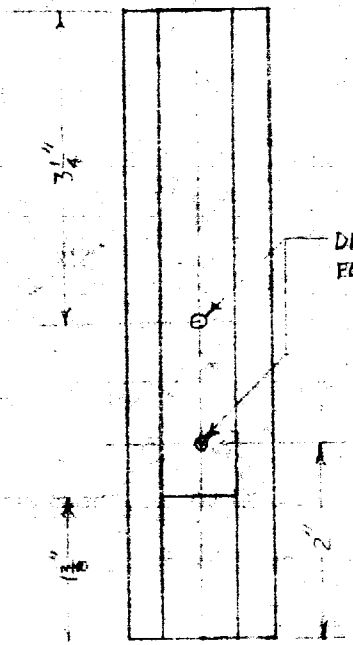

BRAKE DETAIL

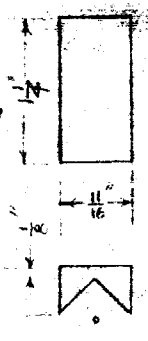

NEOPRENE BLOCK
TO BE CEMENTED TO LEVER END

STRING CAP DETAIL (2 REQ'D.)

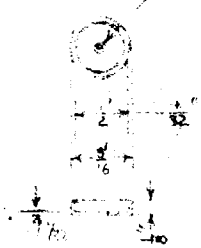

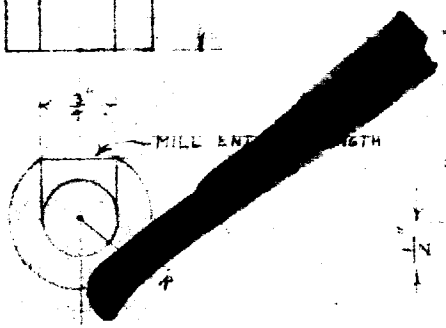

1/2 SIZE

DURAL

UNCLASSIFIED

UNCLASSIFIED

PAGE 108

APPROVED FOR PUBLIC RELEASE

APPROVED FOR PUBLIC RELEASE

WALE SUPPORT

PART 4130

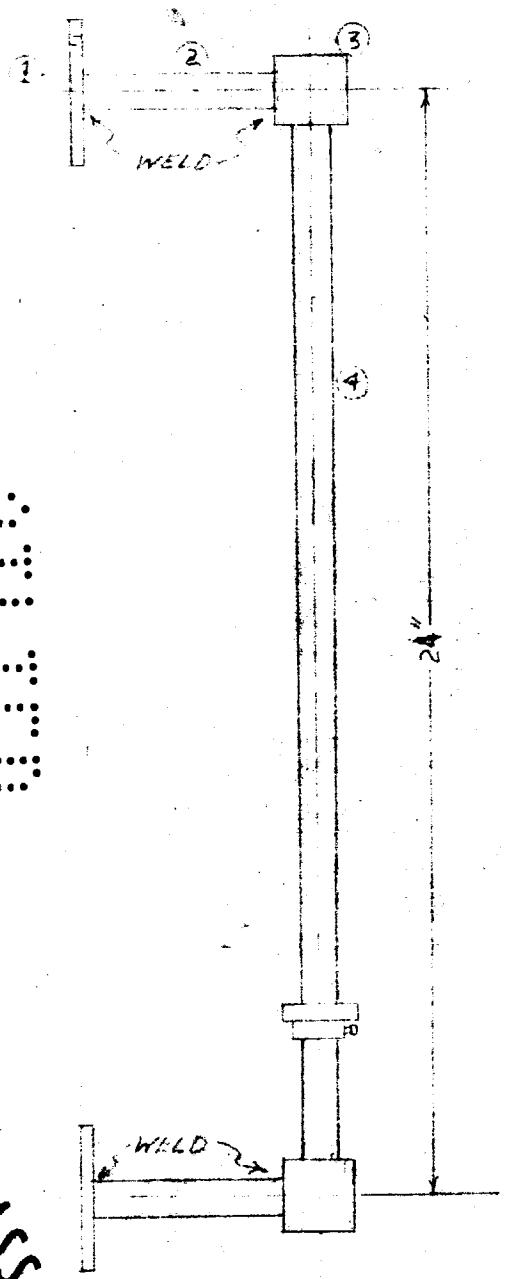

DETAILS

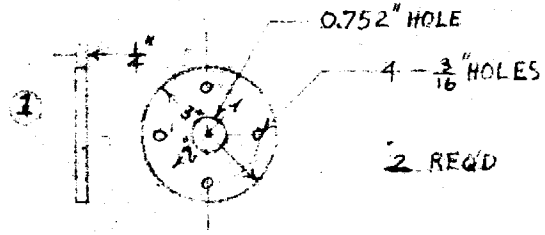

② ROD 0.750"D 4' LONG

2 REQ'D

③

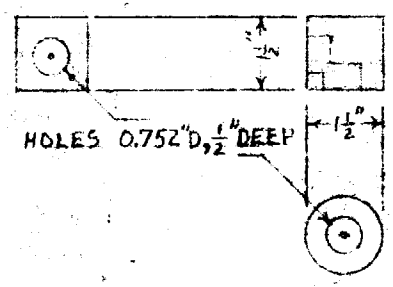

2 REQ'D

④ ROD 0.750"D 23 1/2" LONG

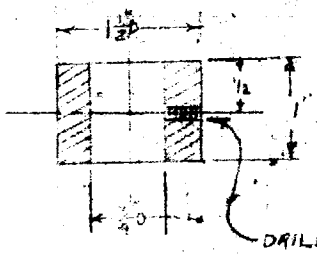

STAINLESS STEEL

1/4 SIZE 5-5-45 WUM

UNCLASSIFIED

UNCLASSIFIED

PAGE 105

APPROVED FOR PUBLIC RELEASE

APPROVED FOR PUBLIC RELEASE

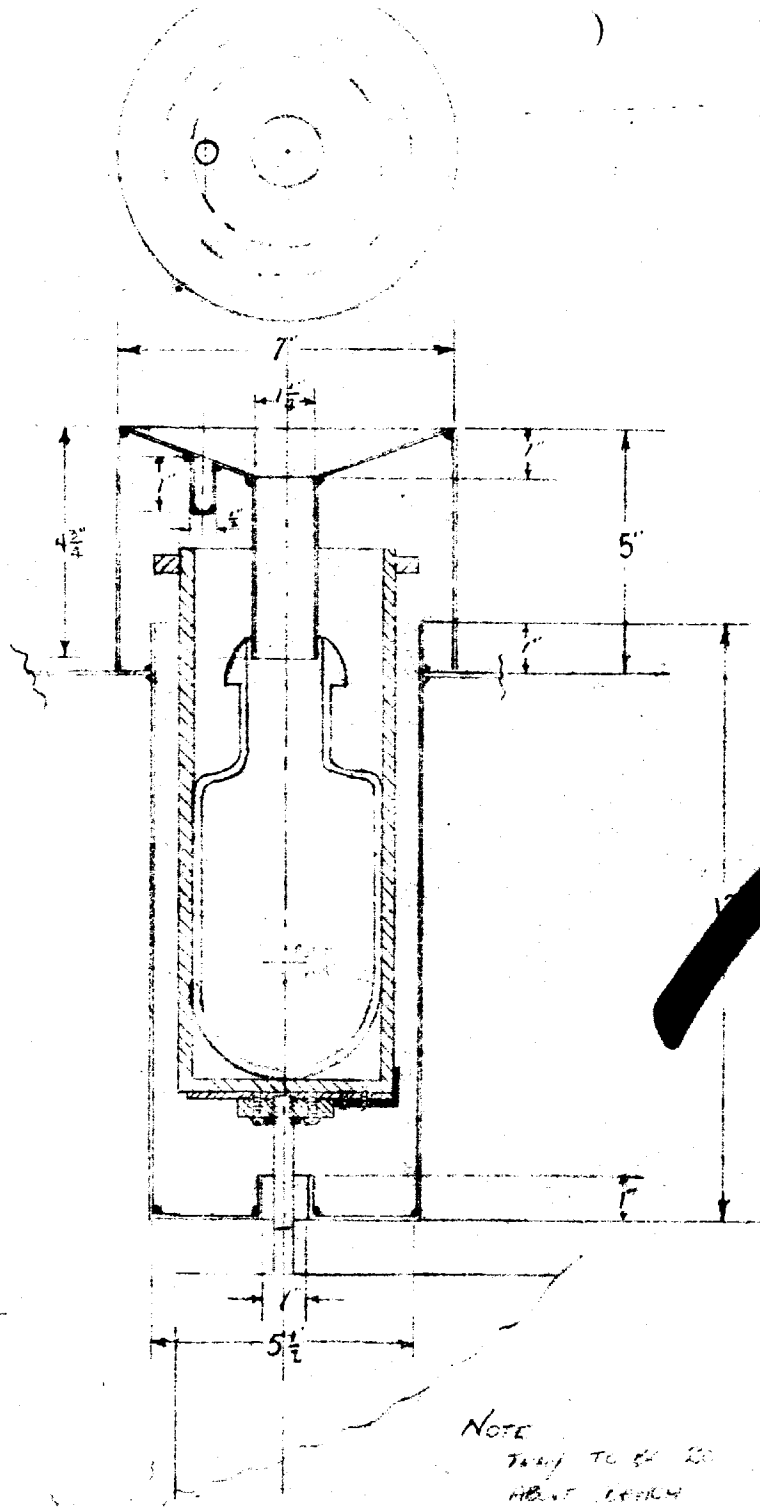

ROUGH CUT APPARATUS
STORAGE BOTTLE HOLDER
PART 4140

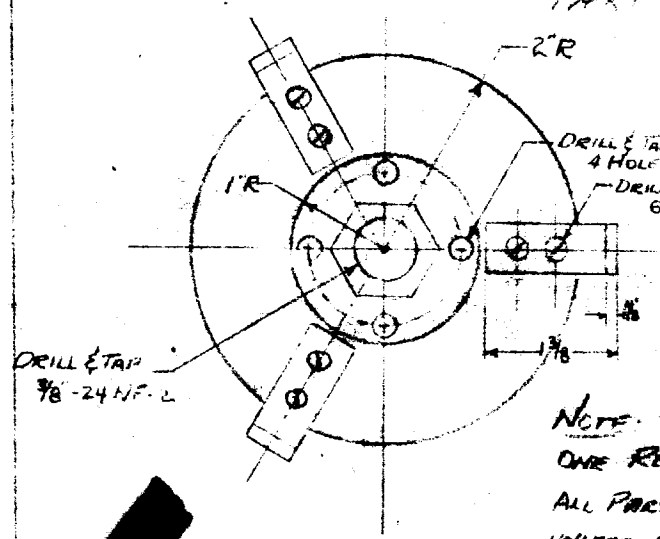

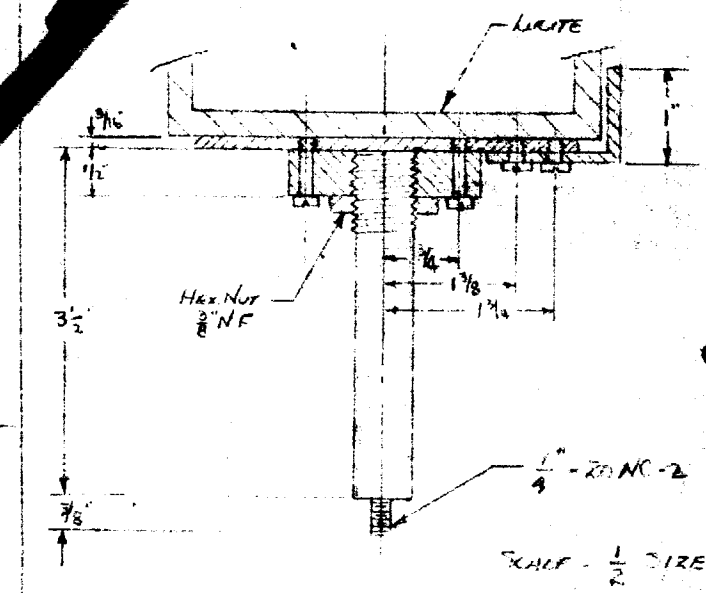

UNCLASSIFIED
UNCLASSIFIED
PAGE 110

APPROVED FOR PUBLIC RELEASE

APPROVED FOR PUBLIC RELEASE

UNCLASSIFIED

UNCLASSIFIED

SPLASH CAP FOR STORAGE BOTTLE
ROUGH CUT
PART 4140-A

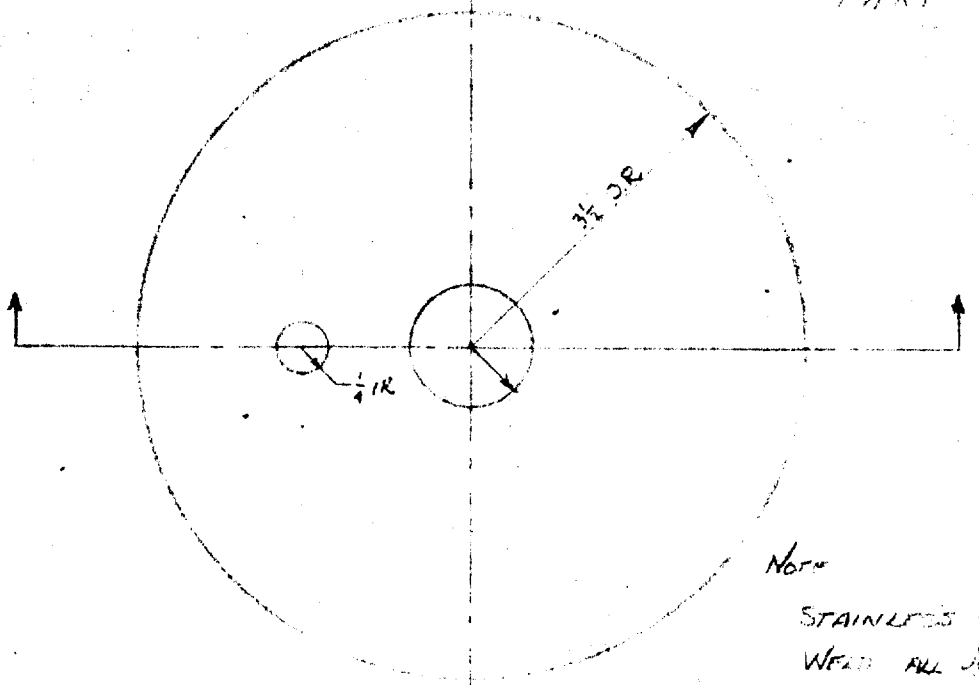

NOTE
STAINLESS STEEL, 18/8 TYPE, .050"
WELD ALL JOINTS
MAKE ONE

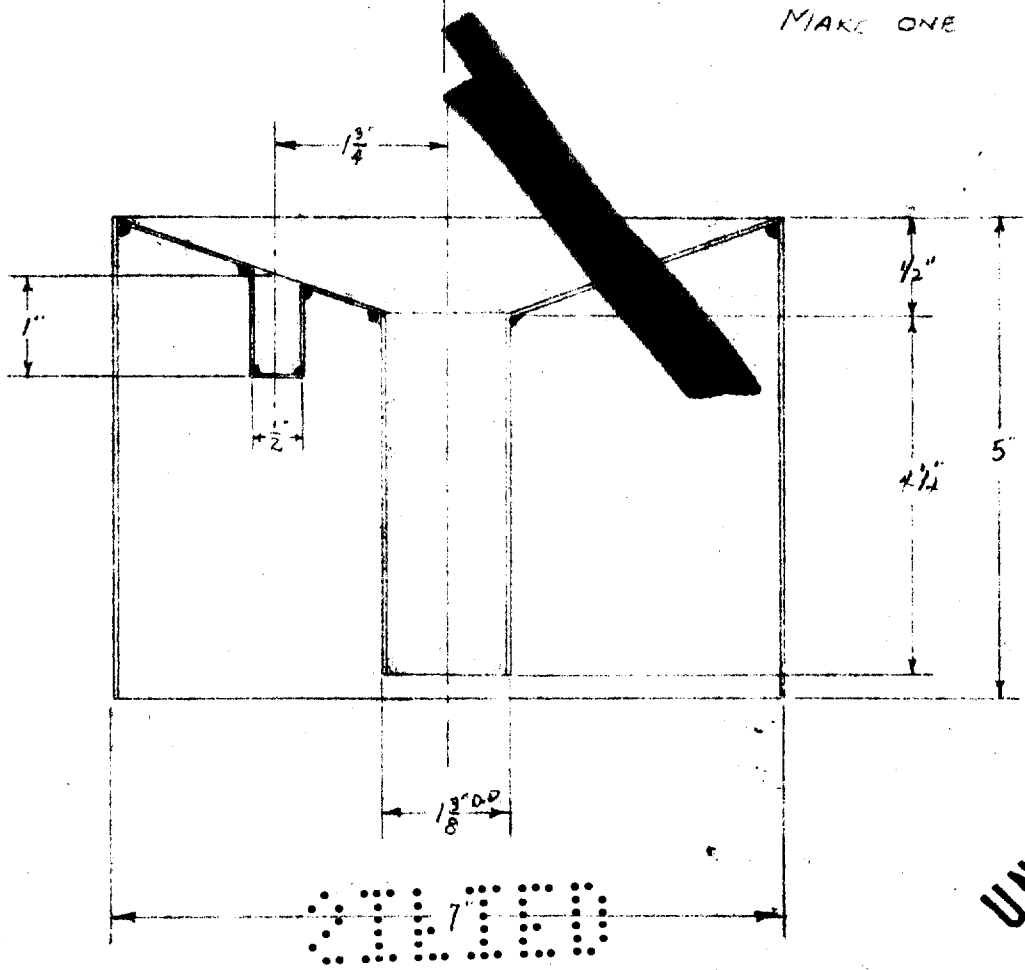

UNCLASSIFIED

SCALE ½
5/5/46 F.C. TAYLOR

APPROVED FOR PUBLIC RELEASE

APPROVED FOR PUBLIC RELEASE

UNCLASSIFIED

TRANSFER APPAR.
PART 4150

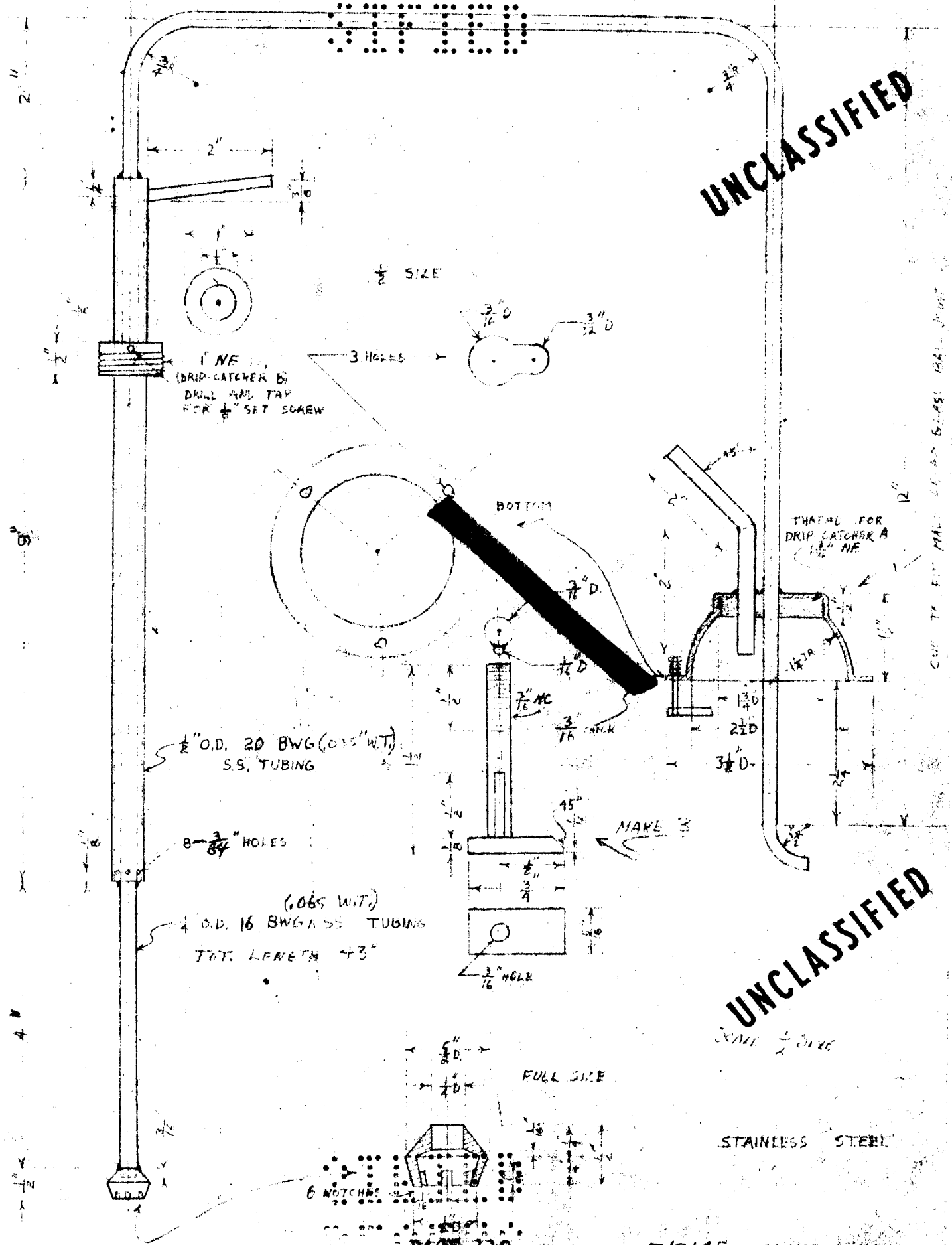

UNCLASSIFIED

APPROVED FOR PUBLIC RELEASE

APPROVED FOR PUBLIC RELEASE

UNCLASSIFIED

DRIPCATCHERS
PART 4160

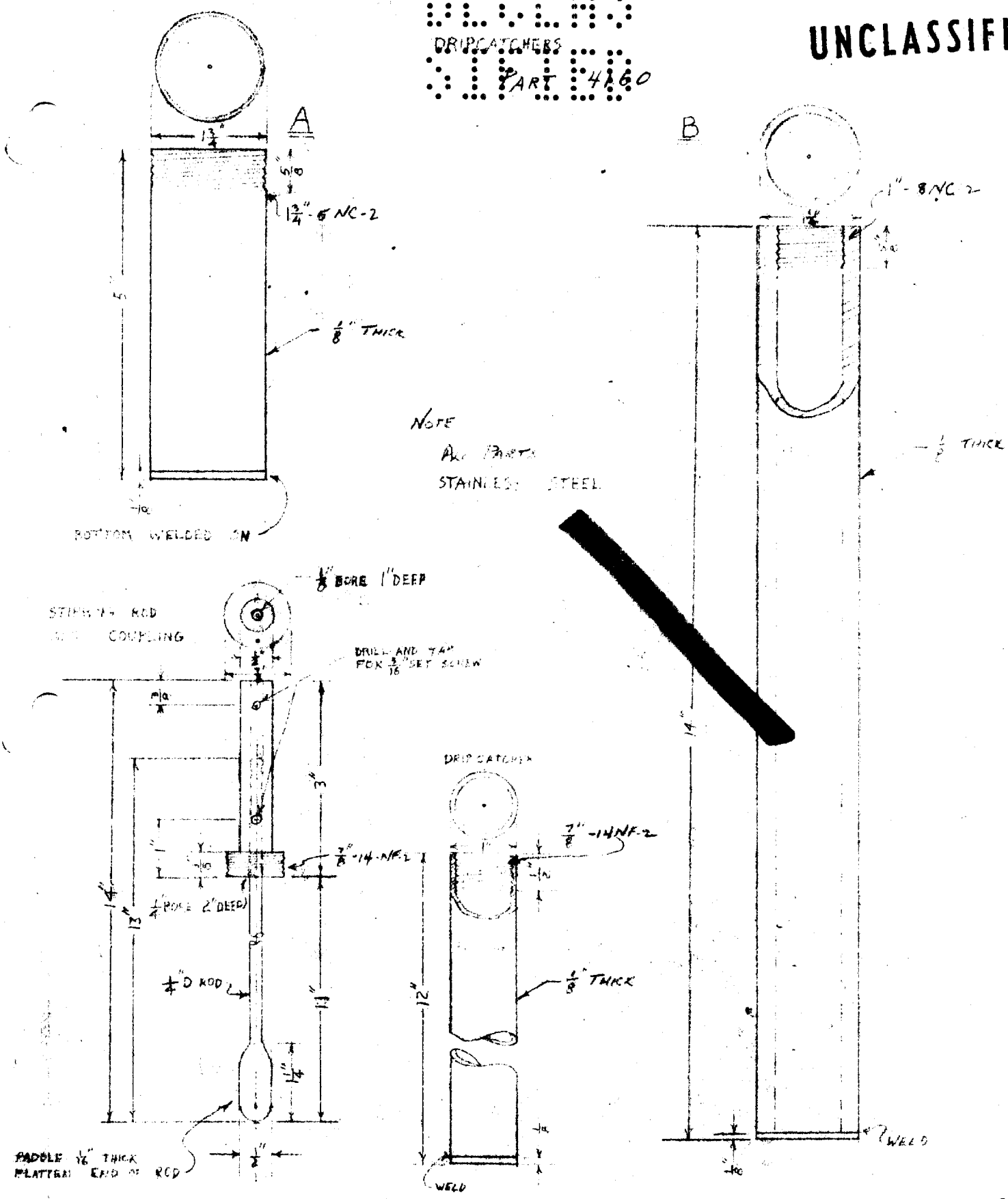

5-8-45 WUM

UNCLASSIFIED

APPROVED FOR PUBLIC RELEASE

APPROVED FOR PUBLIC RELEASE

DECLASSIFIED

UNCLASSIFIED

1 REQD

STAINLESS STEEL, 18GA, .0500"

WELD ALL JOINTS

SPLASH GUARD - R BOTTLE

PART 4170

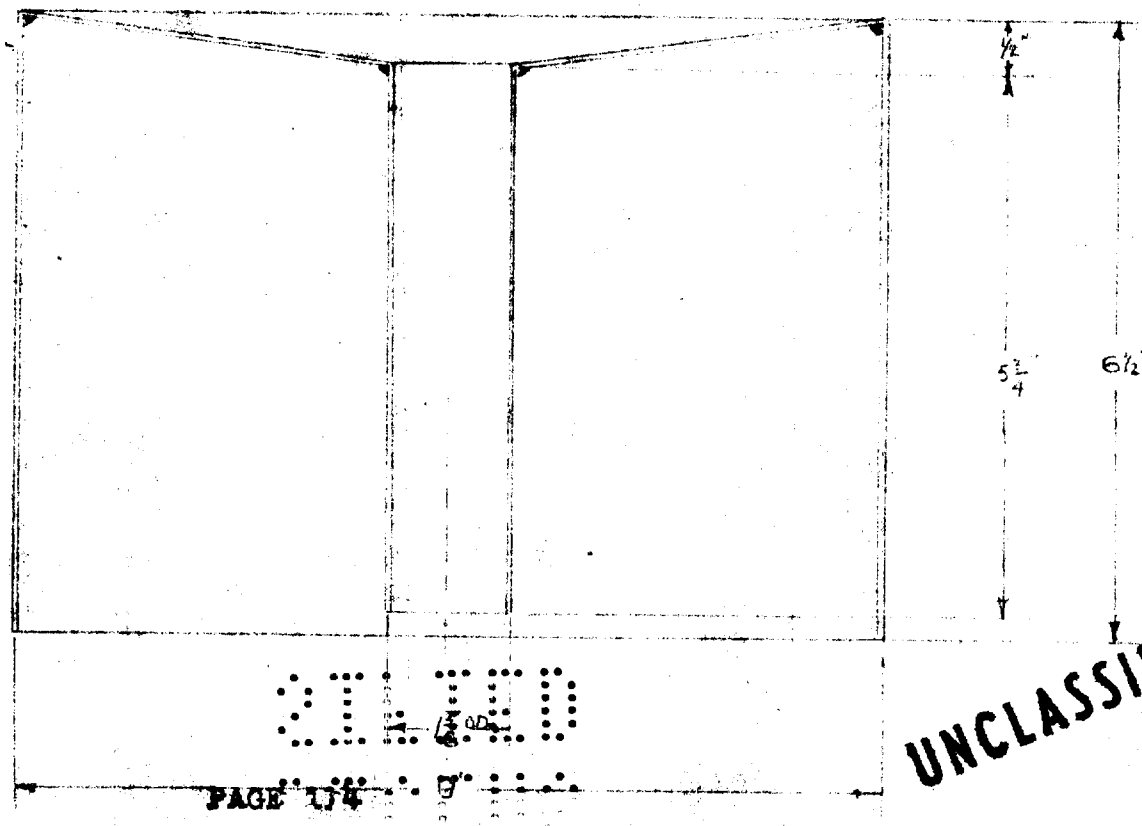

DECLASSIFIED

UNCLASSIFIED

APPROVED FOR PUBLIC RELEASE

APPROVED FOR PUBLIC RELEASE

ROUGH CUT — BOMB HOLDER SUPPORT
PART 4180

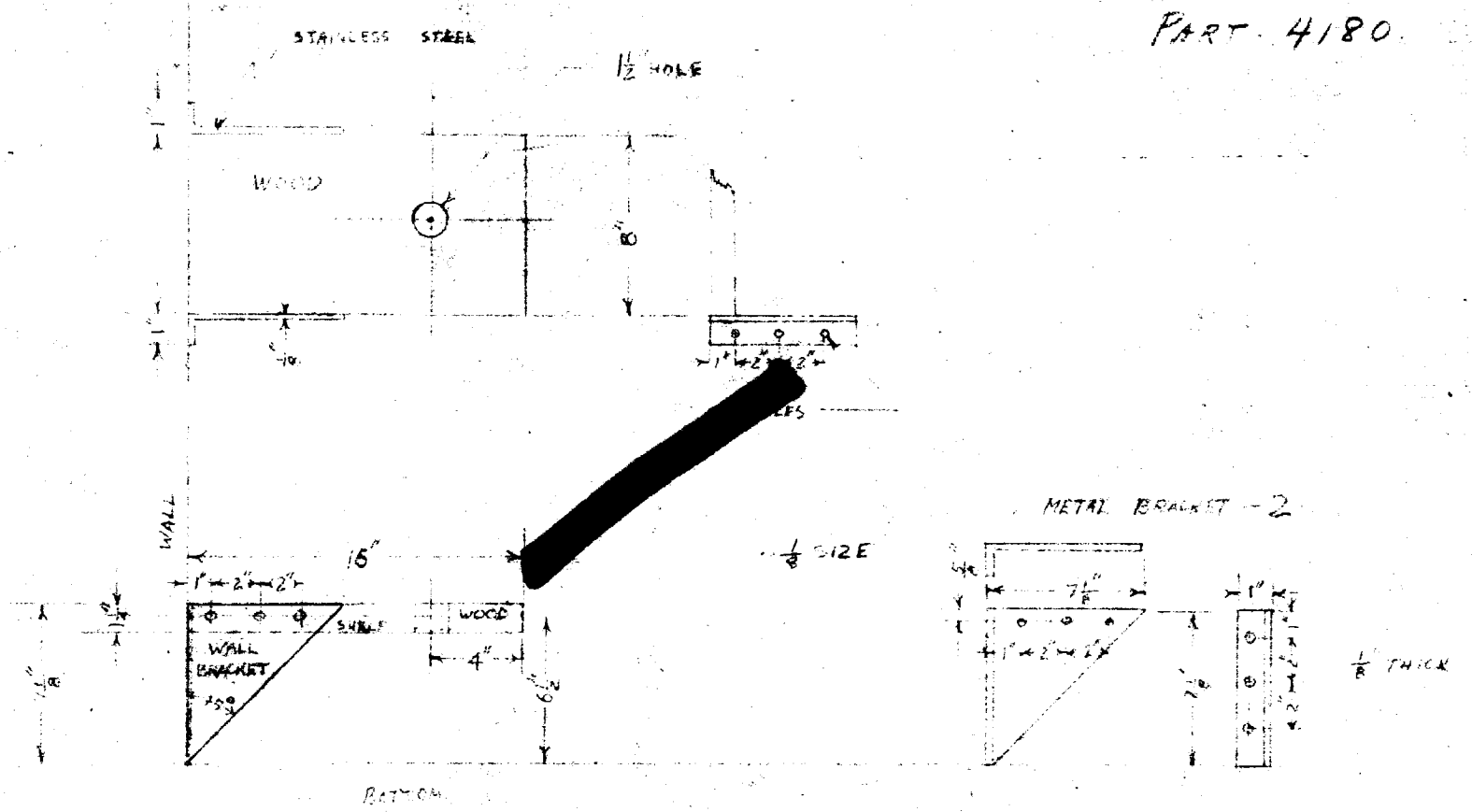

PAGE 115
UNCLASSIFIED
UNCLASSIFIED

5-9-45 KVM

APPROVED FOR PUBLIC RELEASE

APPROVED FOR PUBLIC RELEASE

PART 4190

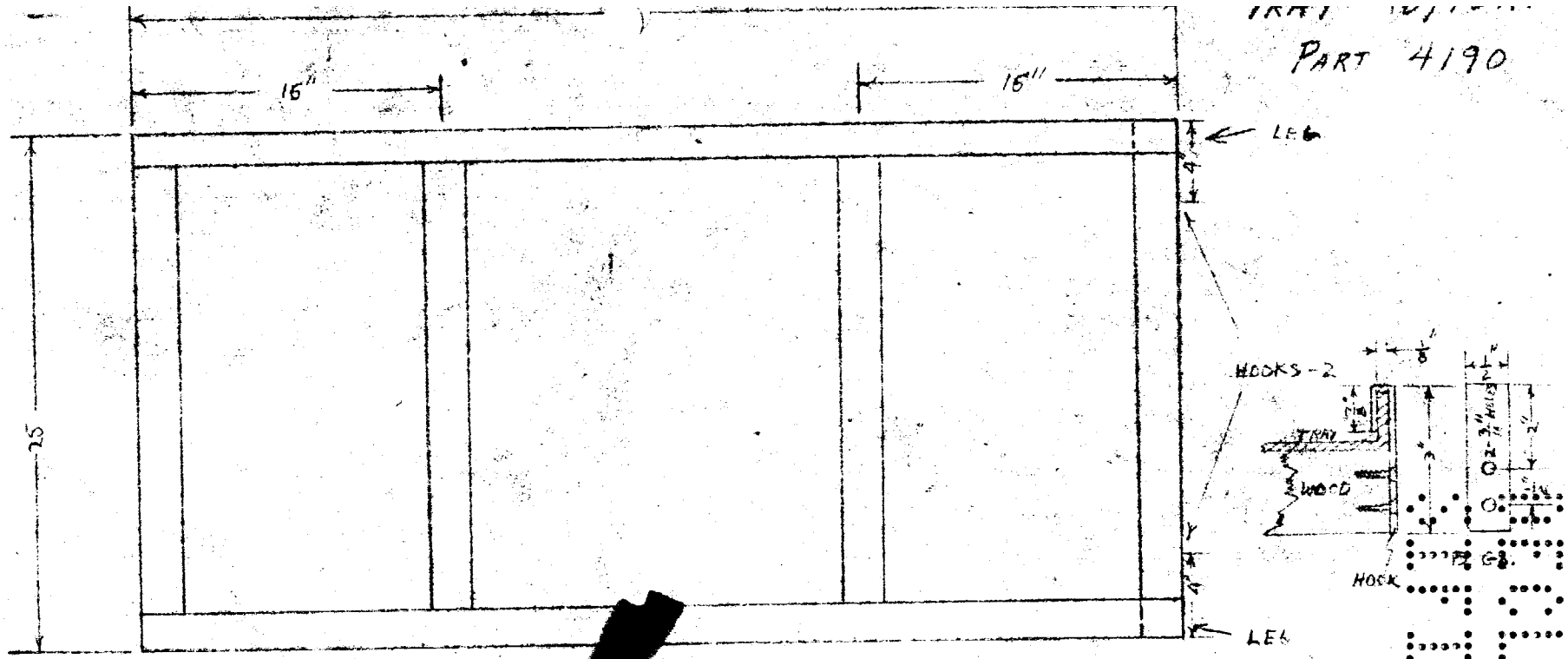

ALL WOOD MEMBERS STD. 2 X 2" UNLESS OTHERWISE NOTED

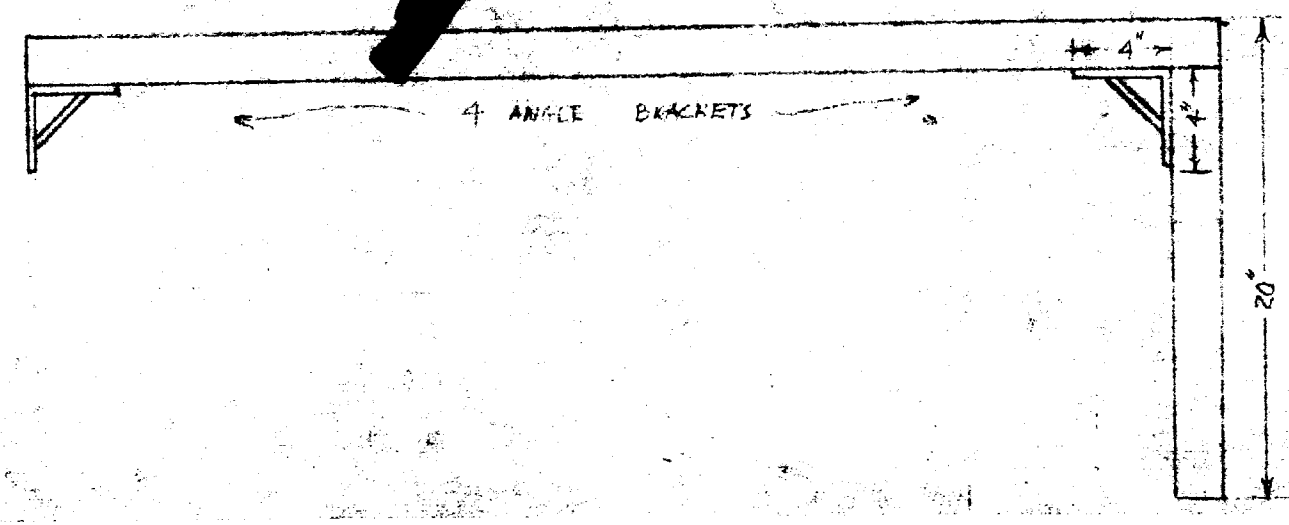

2 LEGS ONLY

1/8 SIZE

PAGE 116

UNCLASSIFIED

UNCLASSIFIED

APPROVED FOR PUBLIC RELEASE

APPROVED FOR PUBLIC RELEASE

PART 4190-A
TRAY

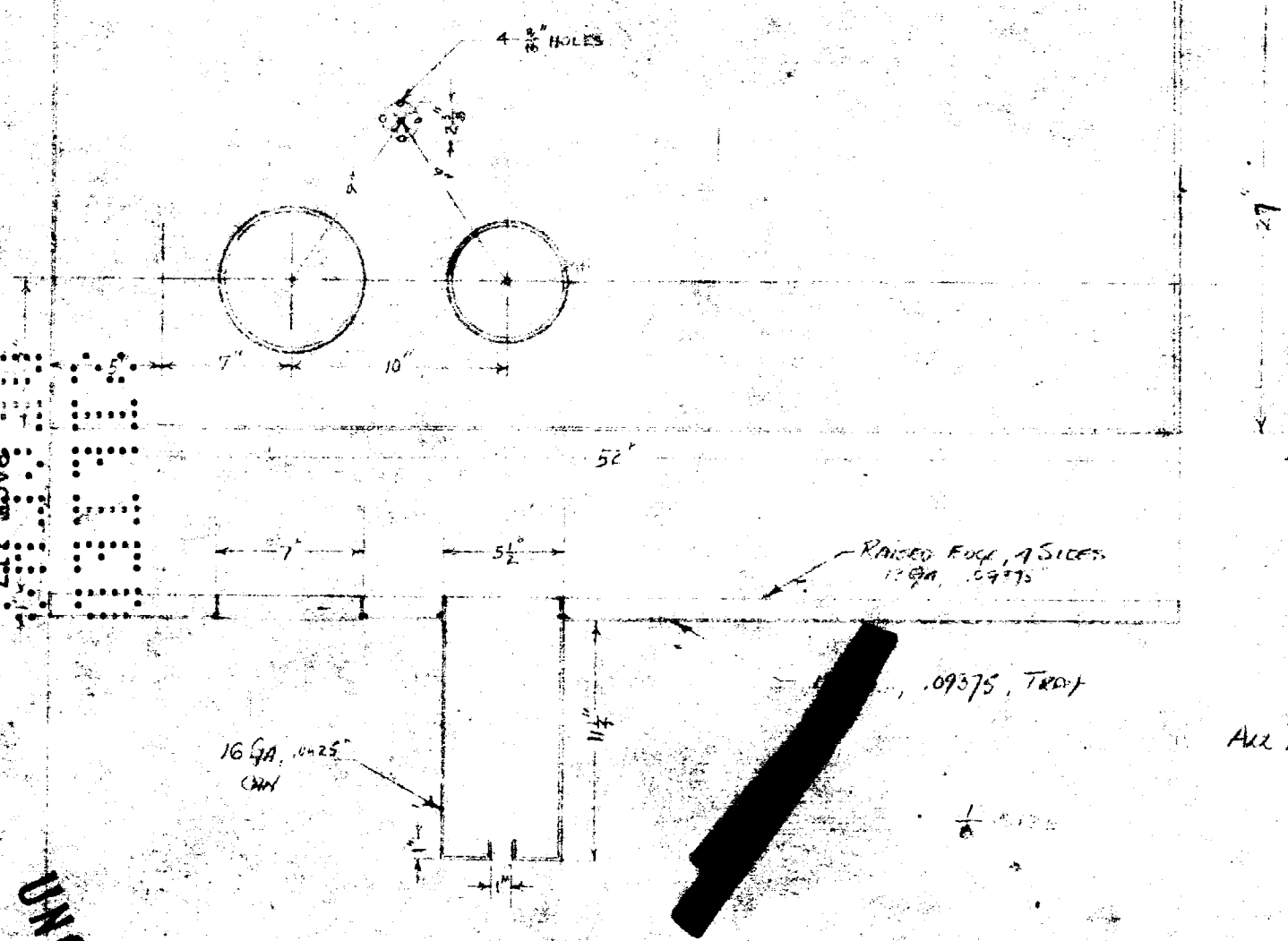

ALL PARTS STAINLESS STEEL

5-4-45 WM

UNCLASSIFIED

UNCLASSIFIED

PAGE 127

APPROVED FOR PUBLIC RELEASE

APPROVED FOR PUBLIC RELEASE

NITRIC ACID BOTTLE HOLDER
PART 4210

PAGE 113

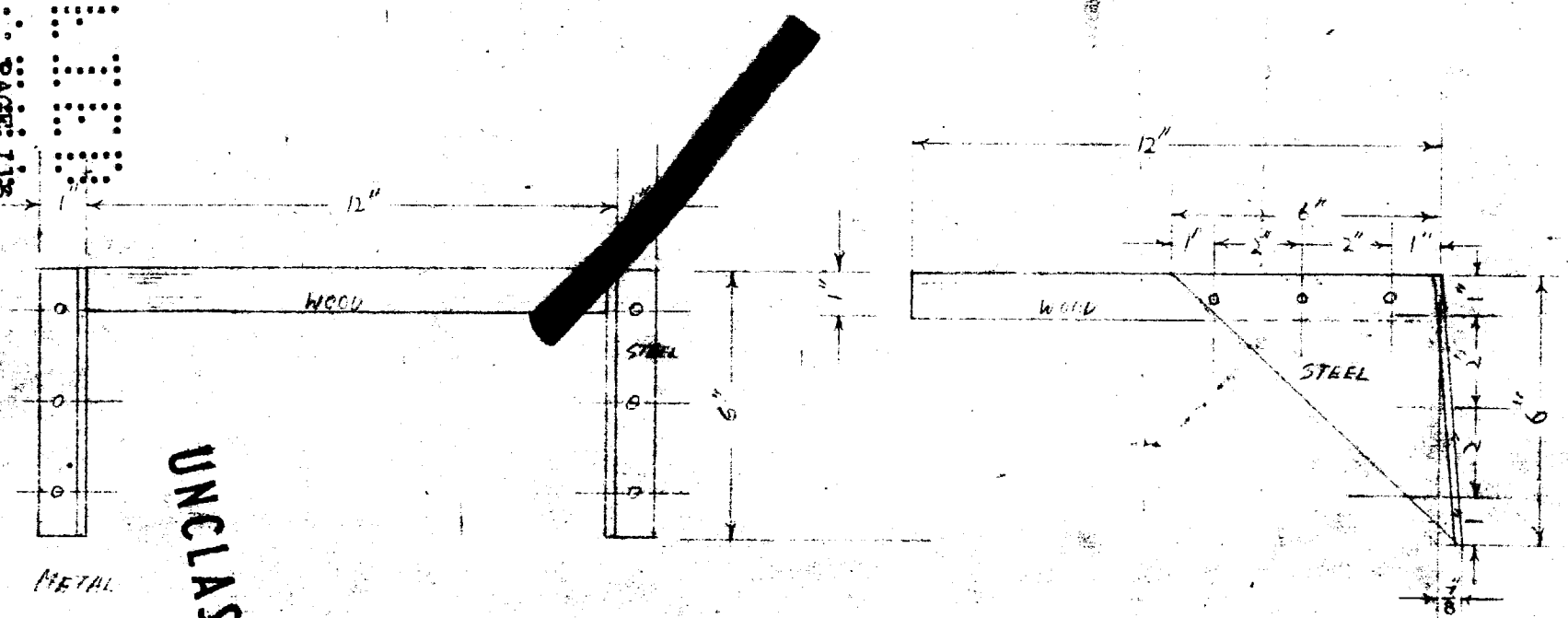

UNCLASSIFIED

UNCLASSIFIED

-½ SIZE

5-15-45 WM

APPROVED FOR PUBLIC RELEASE

APPROVED FOR PUBLIC RELEASE

WALL RACK - MISC.
PART 4220

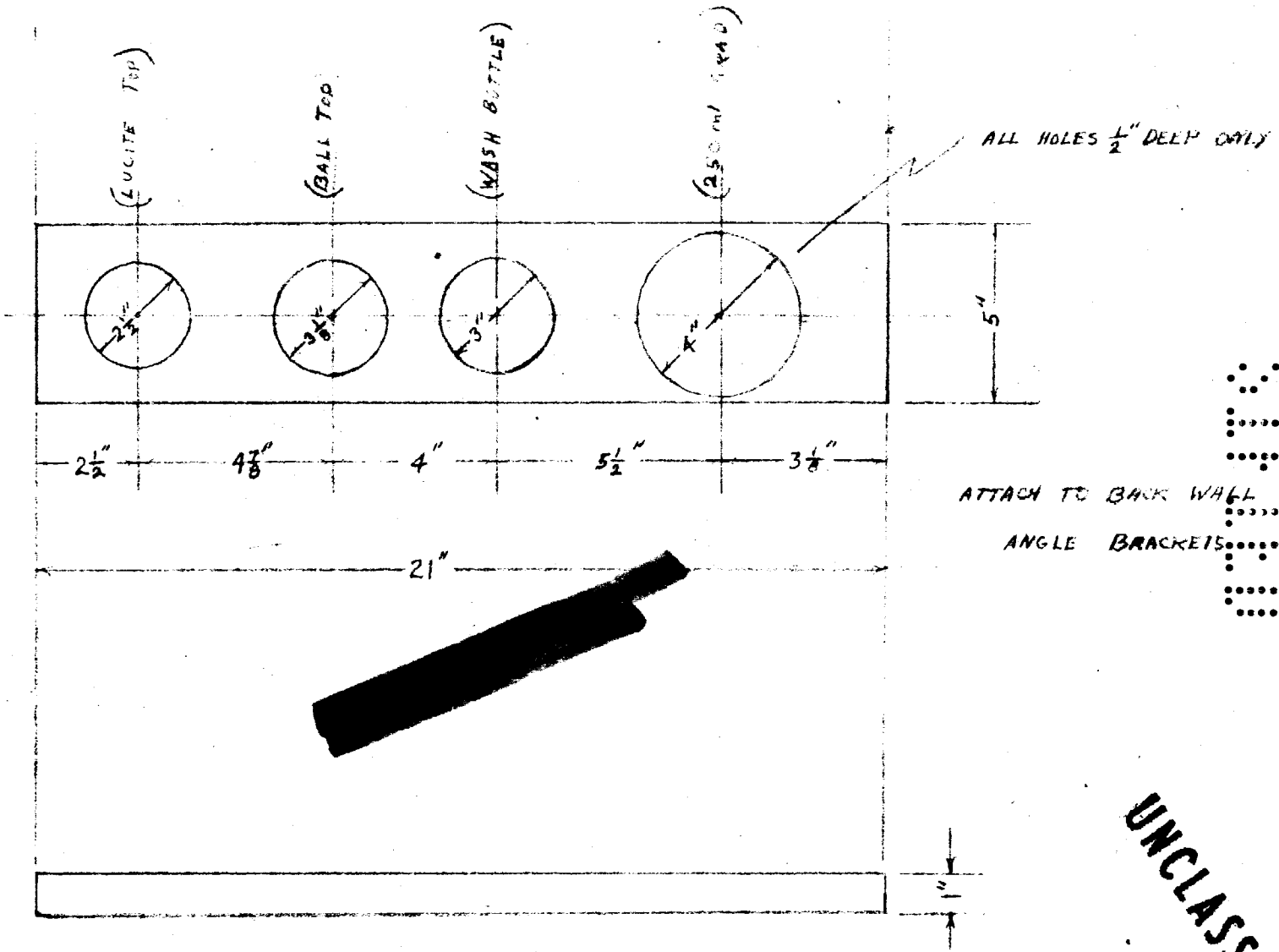

[redacted]

Wall Rack—Misc. Part 4220

UNCLASSIFIED

UNCLASSIFIED

1/4 512C
5-16-45 WJM

APPROVED FOR PUBLIC RELEASE

APPROVED FOR PUBLIC RELEASE

BOMB DRIER INSERT

PART 4230

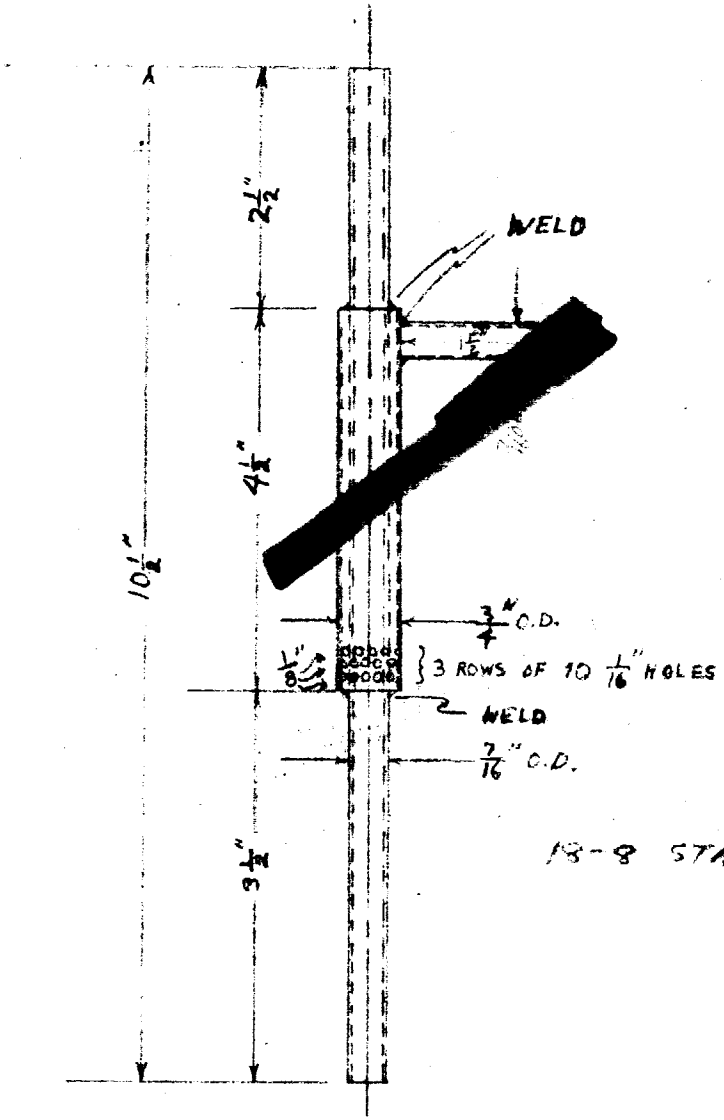

18-8 STAINLESS STEEL 20 BWG (0.035")

$\frac{1}{2}$ SIZE

UNCLASSIFIED

UNCLASSIFIED

APPROVED FOR PUBLIC RELEASE

APPROVED FOR PUBLIC RELEASE

BOMB HOLDER

PART 4240

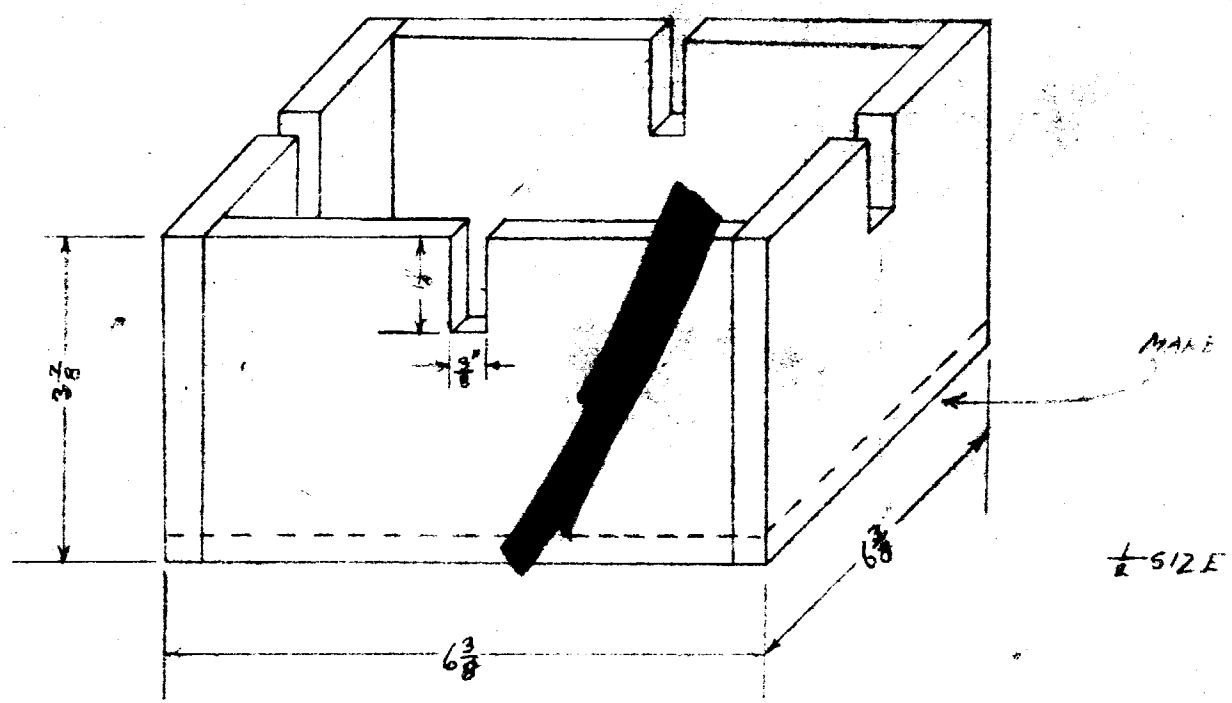

INSIDE DIMENSIONS 5 5/8" x 5 5/8" x 3 1/2"

3/8" PLYWOOD.

UNCLASSIFIED

UNCLASSIFIED

APPROVED FOR PUBLIC RELEASE

APPROVED FOR PUBLIC RELEASE

ROUGH CUT HOOD

PLACEMENT OF EQUIPMENT

UNCLASSIFIED

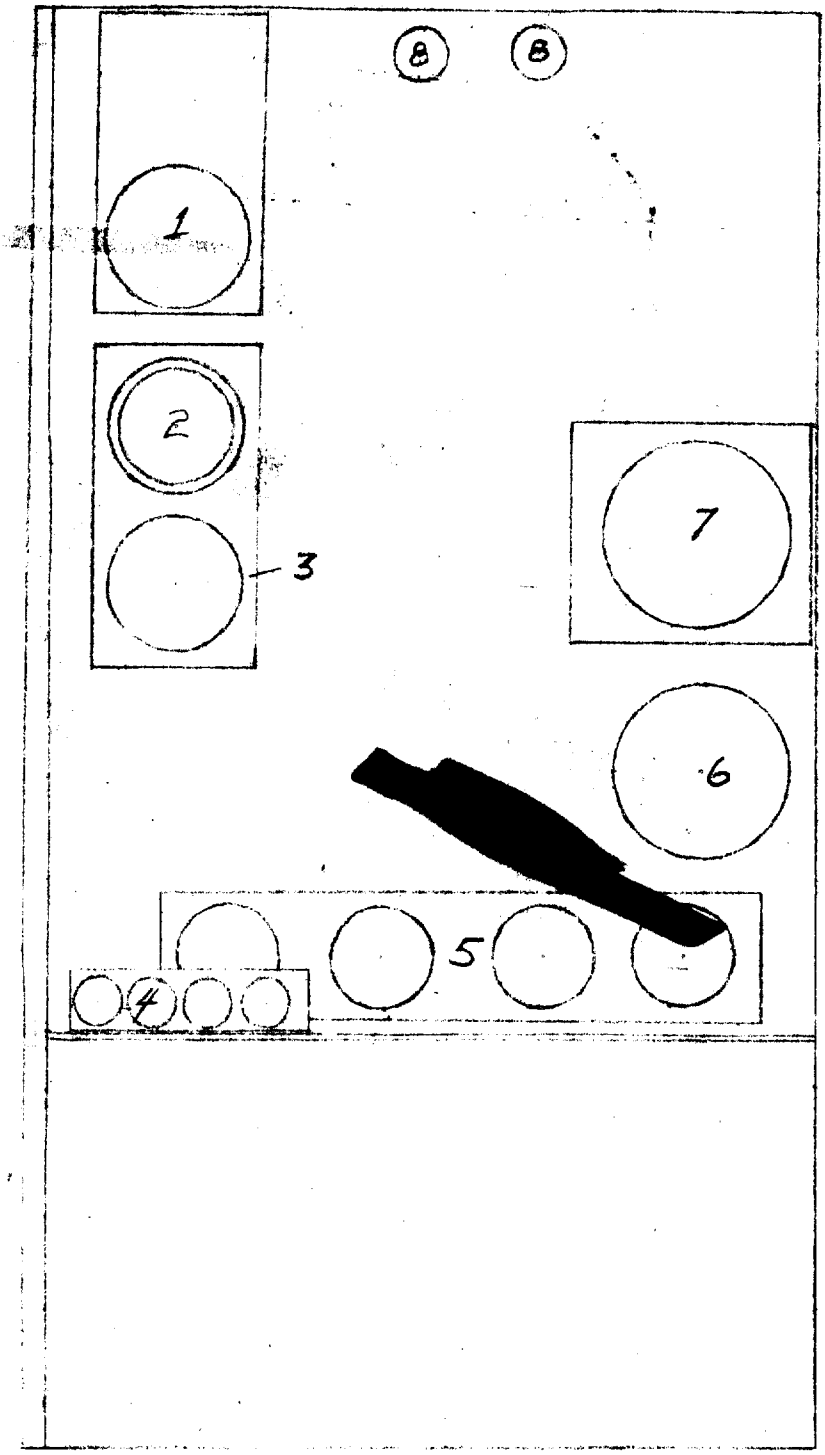

1. Bomb Holder and Rack
2. Transfer Can Holder
3. Pan Balance
4. Graduate Rack
5. Bottle Rack
6. Wash Bottle
7. Nitric Acid Bottle
8. Wolff Bottles

UNCLASSIFIED

APPROVED FOR PUBLIC RELEASE

10-26-45 HCB

APPROVED FOR PUBLIC RELEASE

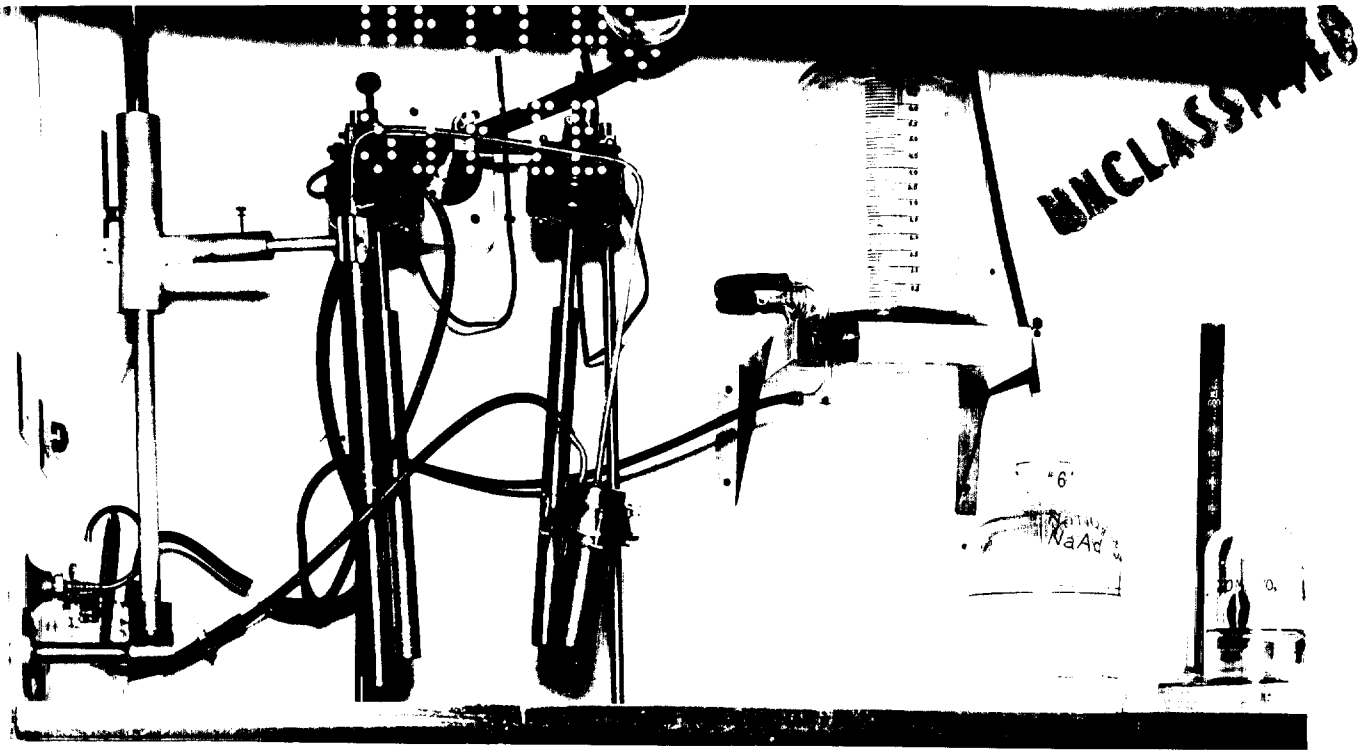

APPROVED FOR PUBLIC RELEASE

APPROVED FOR PUBLIC RELEASE

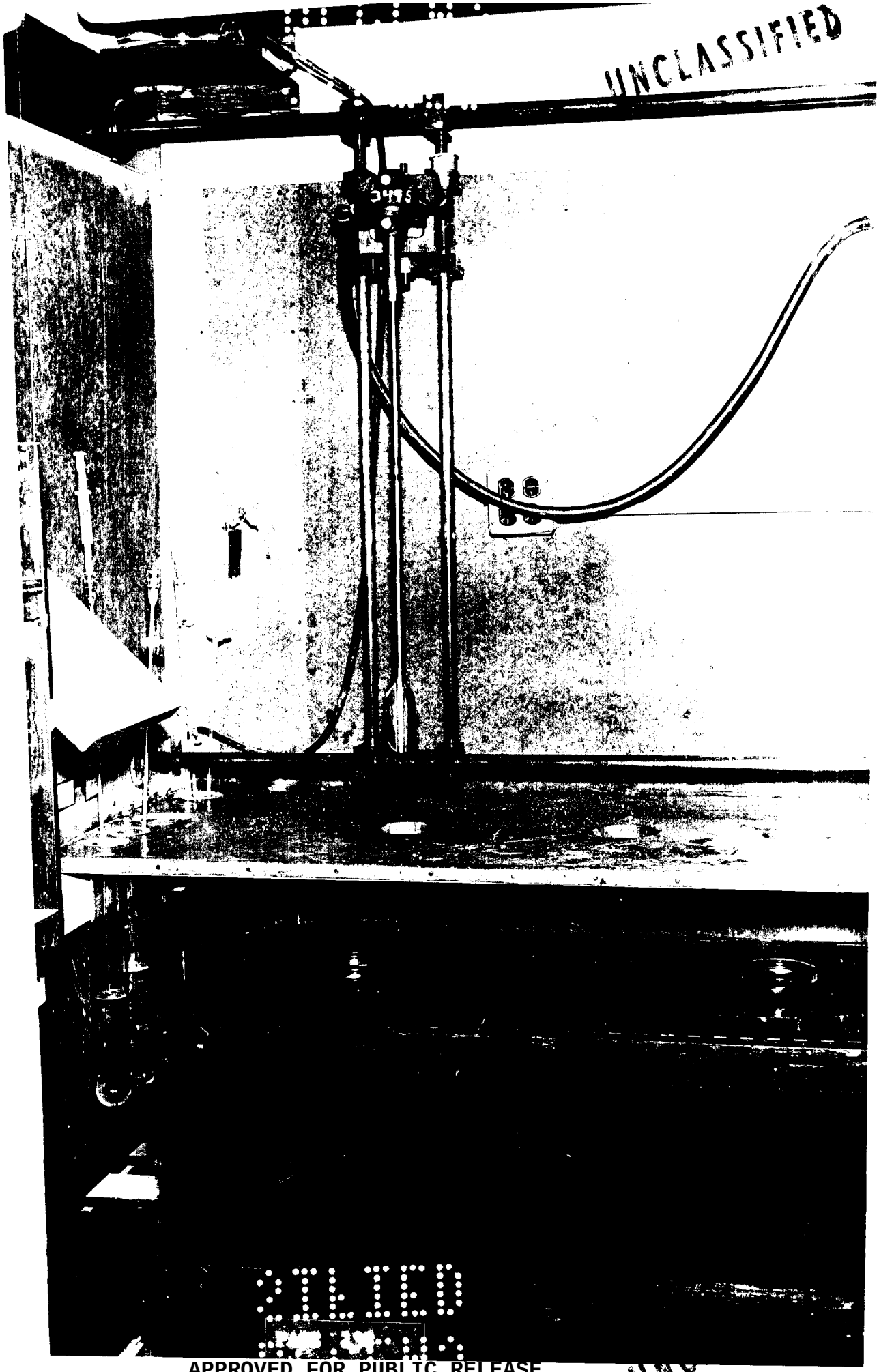

APPROVED FOR PUBLIC RELEASE

APPROVED FOR PUBLIC RELEASE

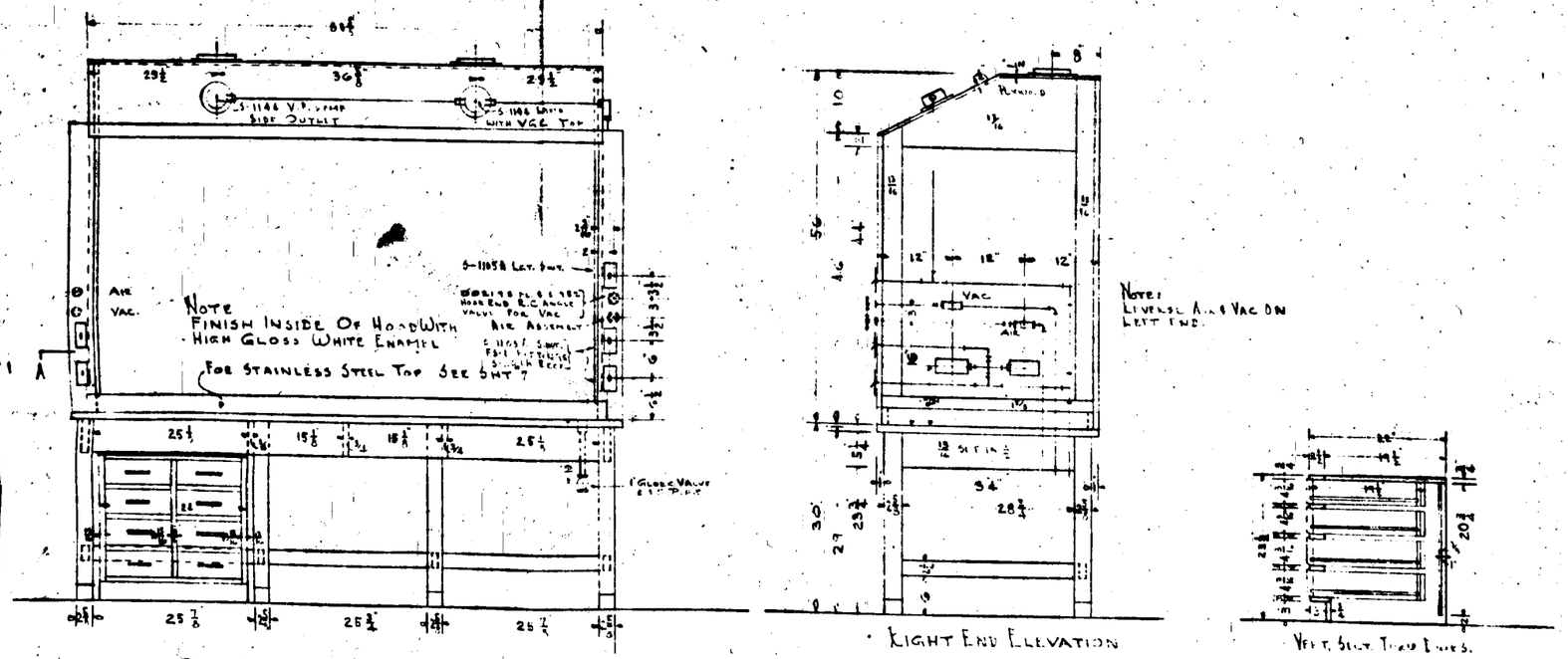

Item (2) One Type F. C Fume Hood As Shown Contains 8 Box Drwrs Clr 9 9/16" x 3 7/8" H x 18" Dp.

Note:
For Vertical & Horizontal Sections & Plumbing Layout See Sht. 1

GRAY	Plumbing Fixtures	Le Grass	Blue Prints	Revisions
	Hardware		Printed / Copied / Purpose / Printed / Copied / Purpose	Revised / Date / Check / Revised / Date / Check

KEWAUNEE MANUFACTURING COMPANY
Adrian, Michigan

Customer	Order Number	Drawn	Check	Detail	Check	Scale
	W-3338					

APPROVED FOR PUBLIC RELEASE

APPROVED FOR PUBLIC RELEASE

UNCLASSIFIED

UNCLASSIFIED

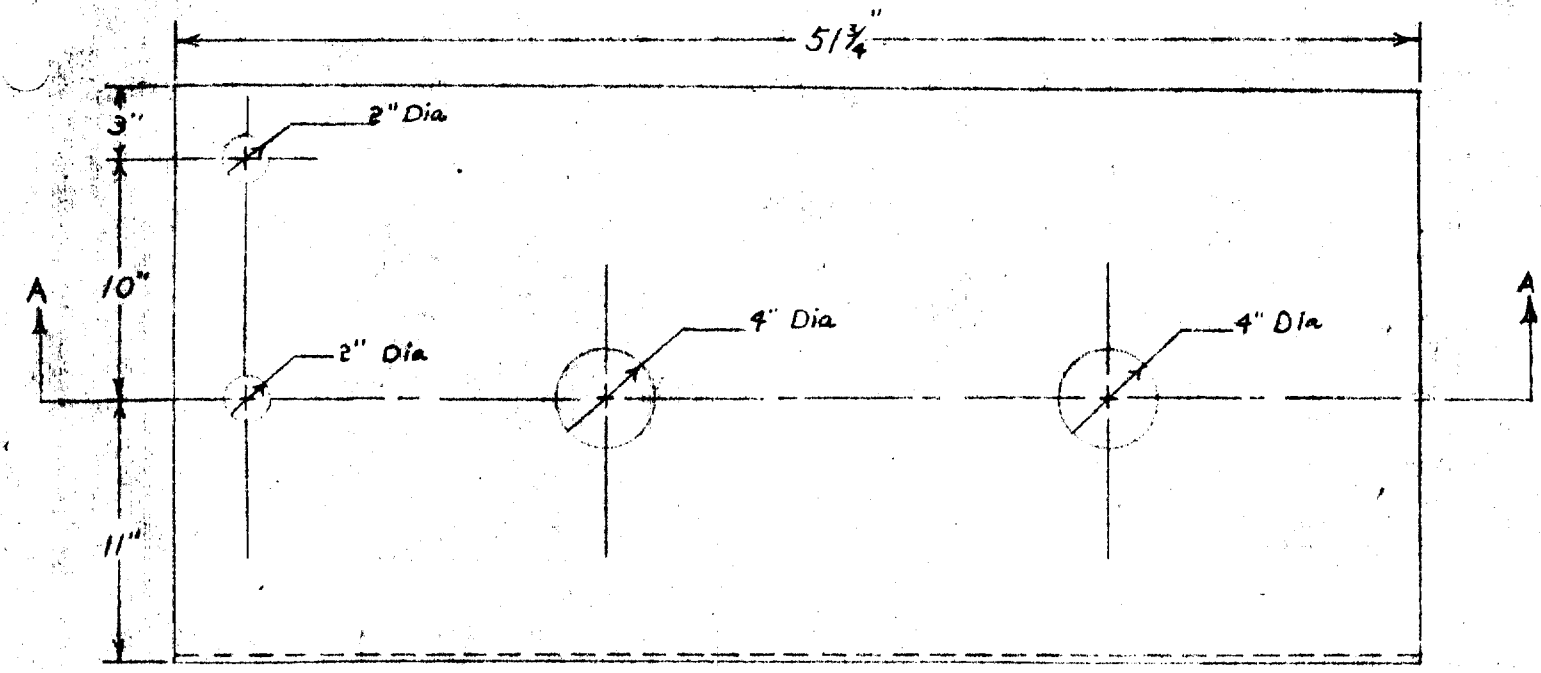

[redacted]

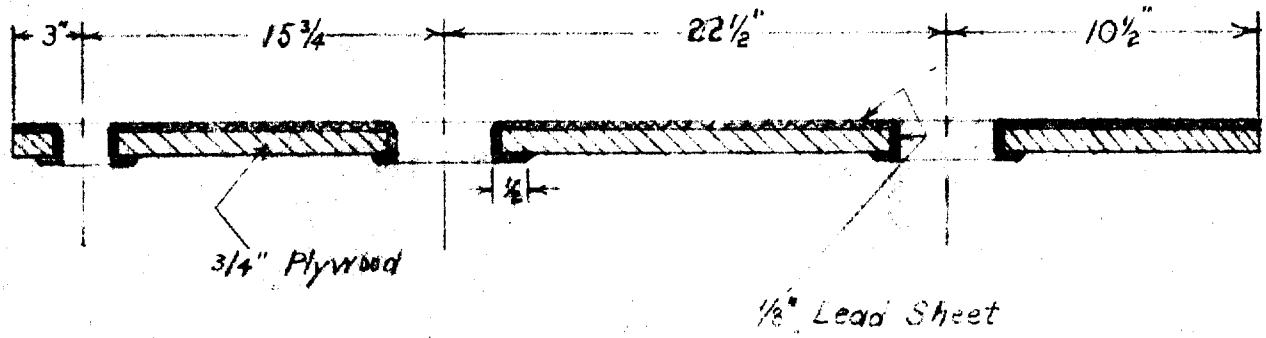

Section A-A

Shelf for "Cut" Room

PART #310

Scale: 1" = 8"

APPROVED FOR PUBLIC RELEASE

UNCLASSIFIED

APPROVED FOR PUBLIC RELEASE

UNCLASSIFIED

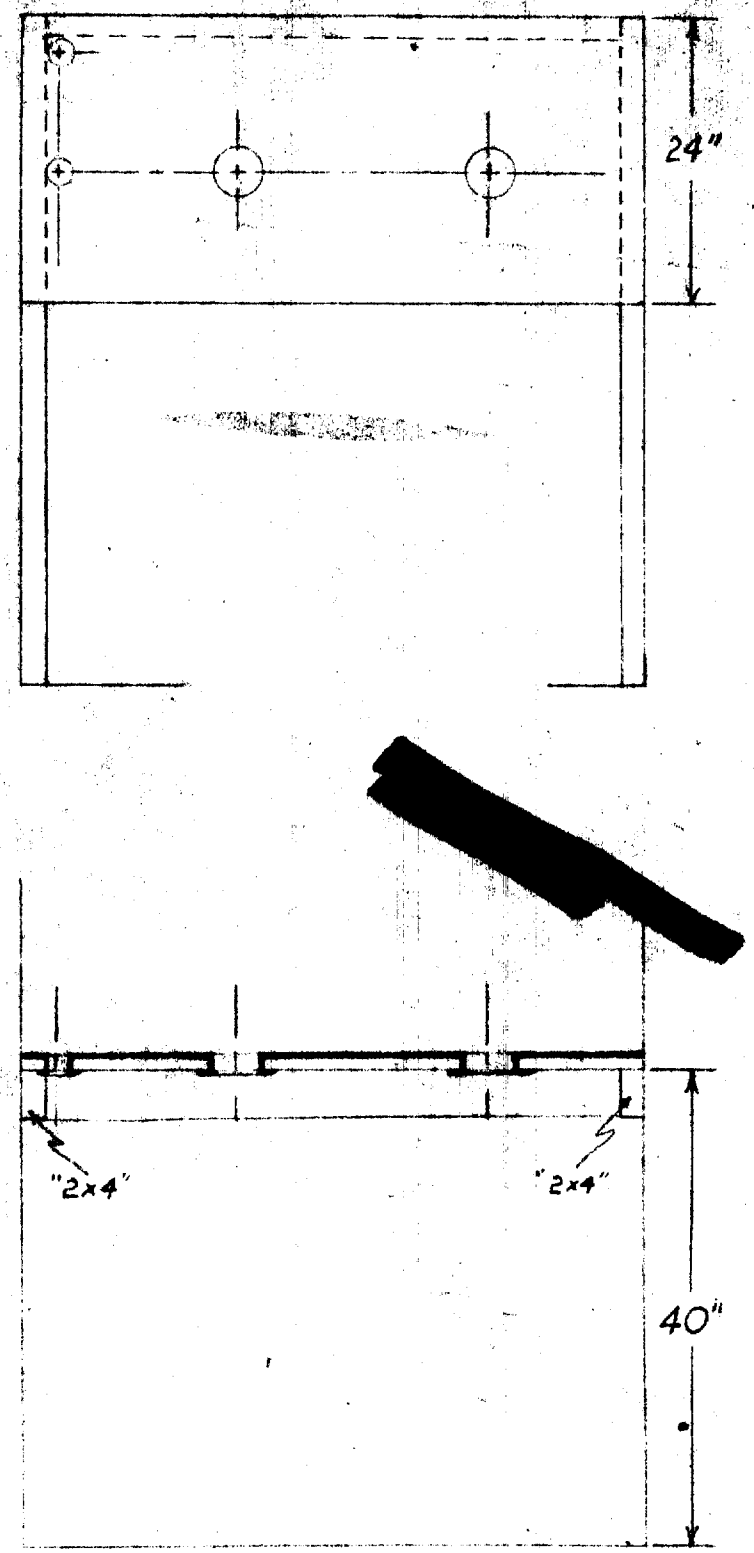

UNCLASSIFIED

Shelf in "Cut" Room

PART 4310

Scale: 1" = 16"

APPROVED FOR PUBLIC RELEASE

APPROVED FOR PUBLIC RELEASE

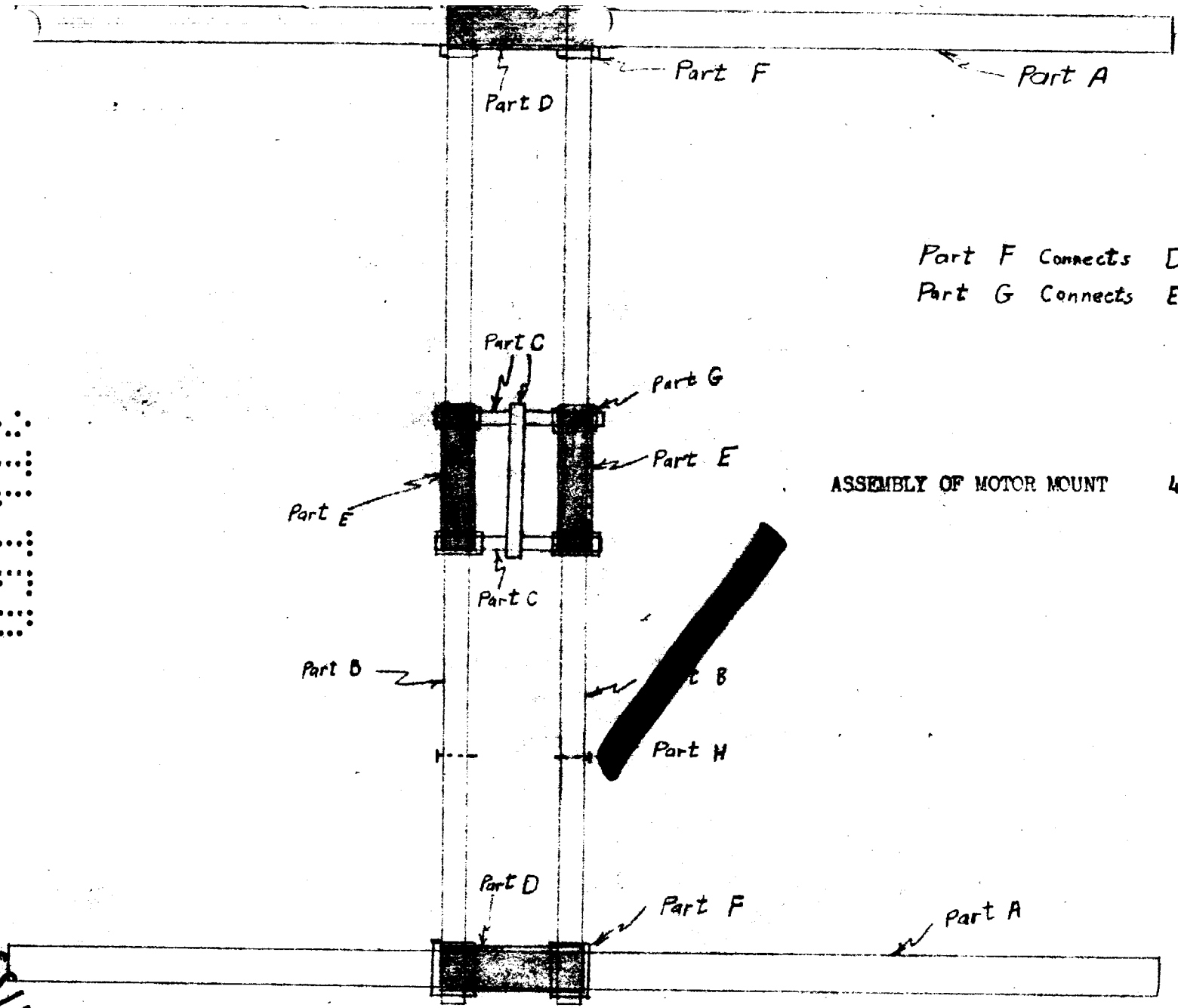

Part F Connects D and B
Part G Connects E and C

ASSEMBLY OF MOTOR MOUNT 4320

UNCLASSIFIED

UNCLASSIFIED

APPROVED FOR PUBLIC RELEASE

APPROVED FOR PUBLIC RELEASE

UNCLASSIFIED

UNCLASSIFIED

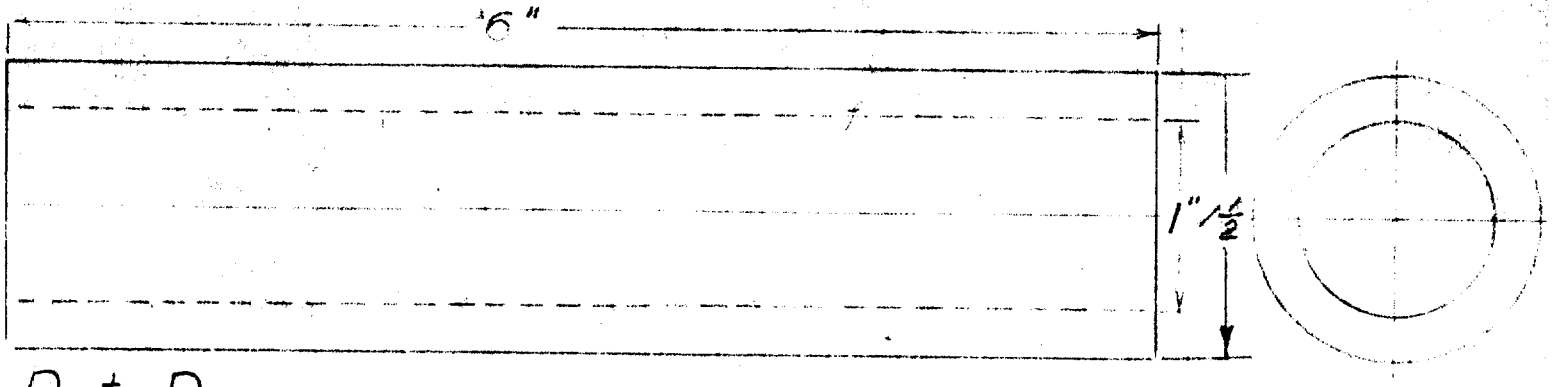

Part D

Make 2

Inside Dimension Should Have a Slip Fit Over the 1" Steel Rod Marked "Part A."

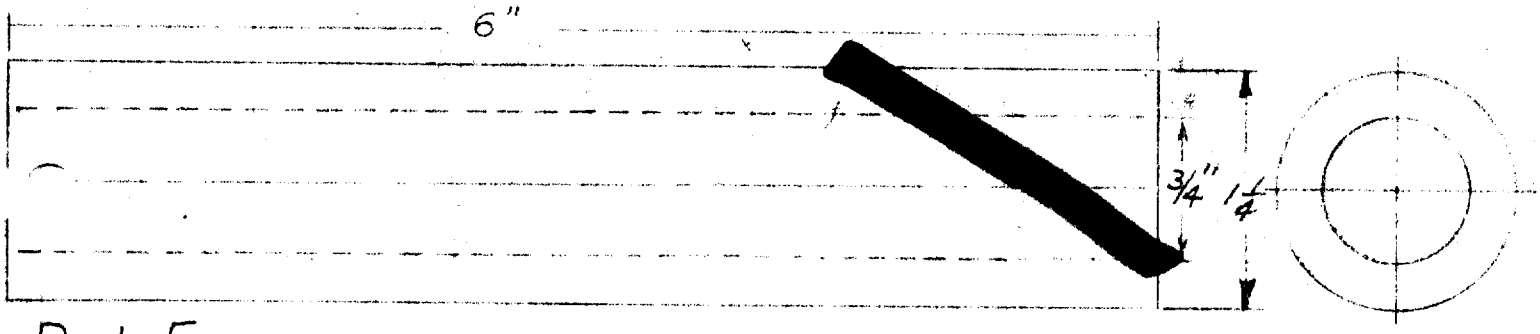

Part E

Make 2

Inside Dimension Should Have a Slip Fit Over the 3/4" Steel Rod Marked "Part B"

Brass Bushings for Motor Mount

4320-A

UNCLASSIFIED

APPROVED FOR PUBLIC RELEASE

APPROVED FOR PUBLIC RELEASE

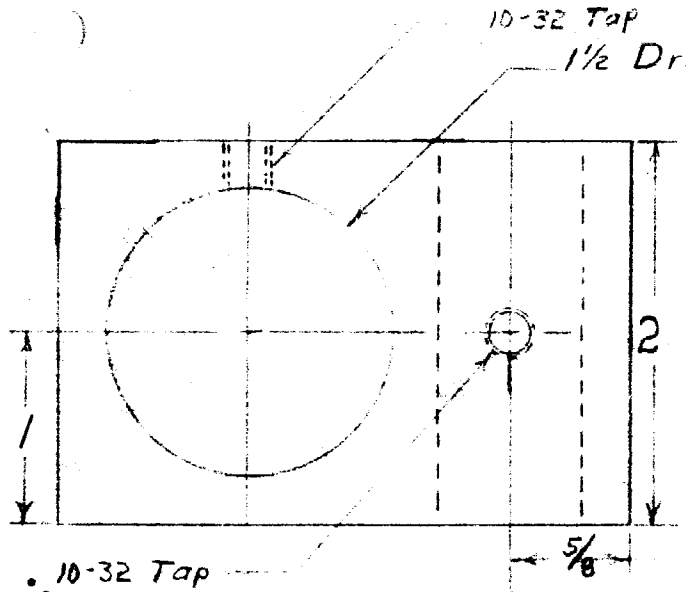

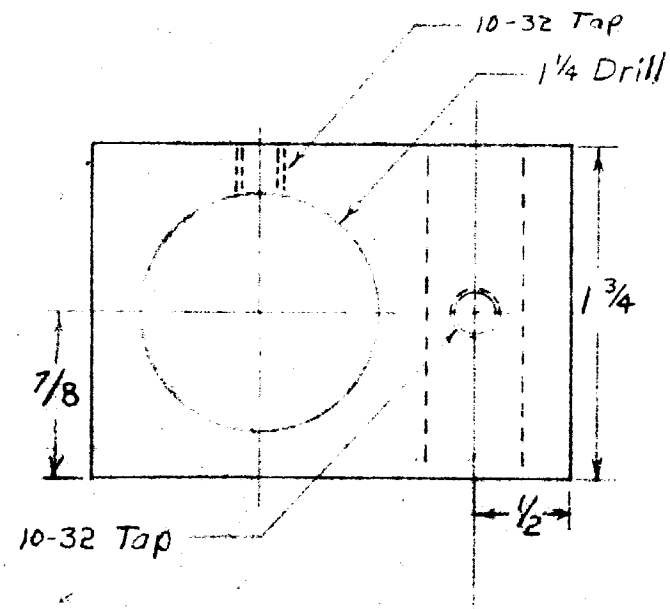

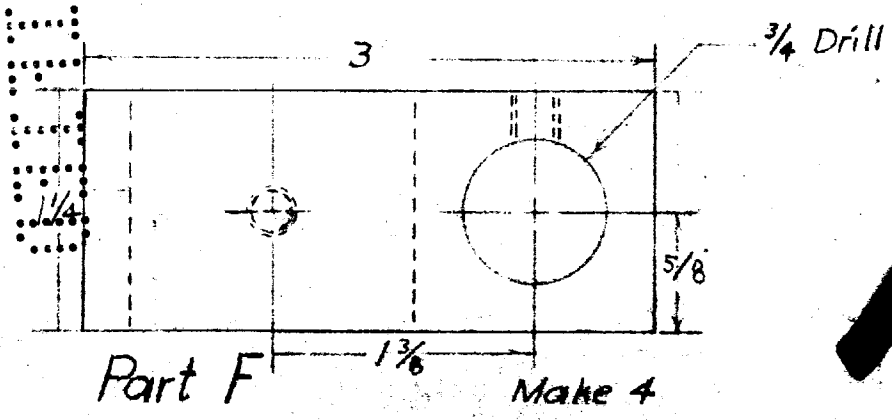

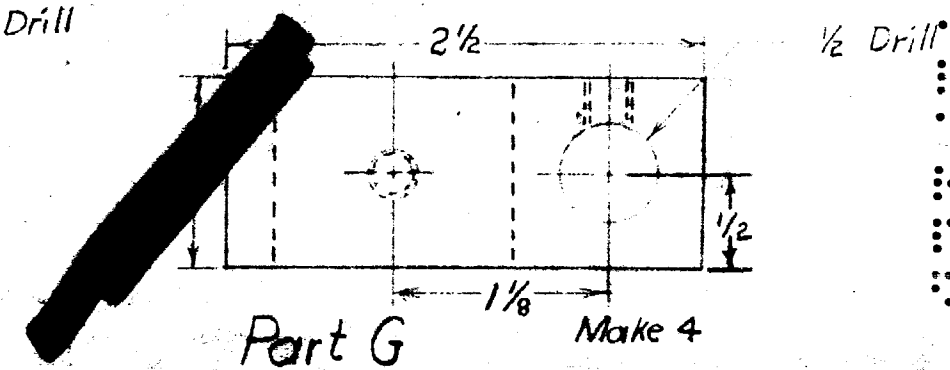

STEEL ADAPTERS FOR MOTOR MOUNT

1½" Hole Has a Slip Fit Over Brass Bushing, Part D

¾" Hole Has a Slip Fit Over Steel Rod, Part B

1¼" Hole Has a Slip Fit Over Brass Bushing, Part E

½" Hole Has a Slip Fit Over Steel Rod, Part C

4320-B

Scale: 1"=1"

ADAPTERS FOR MOTOR MOUNT

UNCLASSIFIED

UNCLASSIFIED

APPROVED FOR PUBLIC RELEASE

APPROVED FOR PUBLIC RELEASE

DECLASSIFIED

UNCLASS.

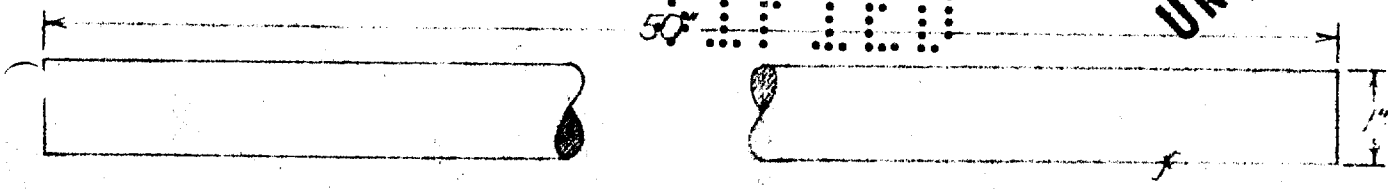

Part A Steel Make 2

Part H Should be a slip fit into the 1/8" holes drilled in Part B

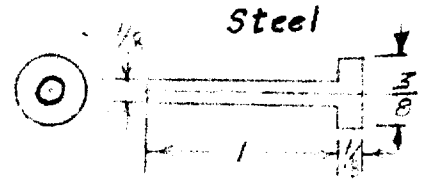

Part H Make 4

43550-D

Part B Steel Make 2

In This piece, Drill 12 1/8" holes at 3" Intervals. The First is to be 3" from one End, and the Last 4 inches From the Other End.

Note: Tolerance is not critical

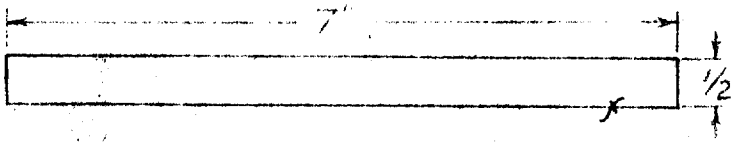

Part C Steel Make 3

Part C Should slip into 1/2" Adaptor Which is Furnished

4320-C

Tolerances: ± 0.01 on Diameters
± 0.15 on Lengths

Parts for Motor Mount

DECLASSIFIED

UNCLASSIFIED

APPROVED FOR PUBLIC RELEASE

APPROVED FOR PUBLIC RELEASE

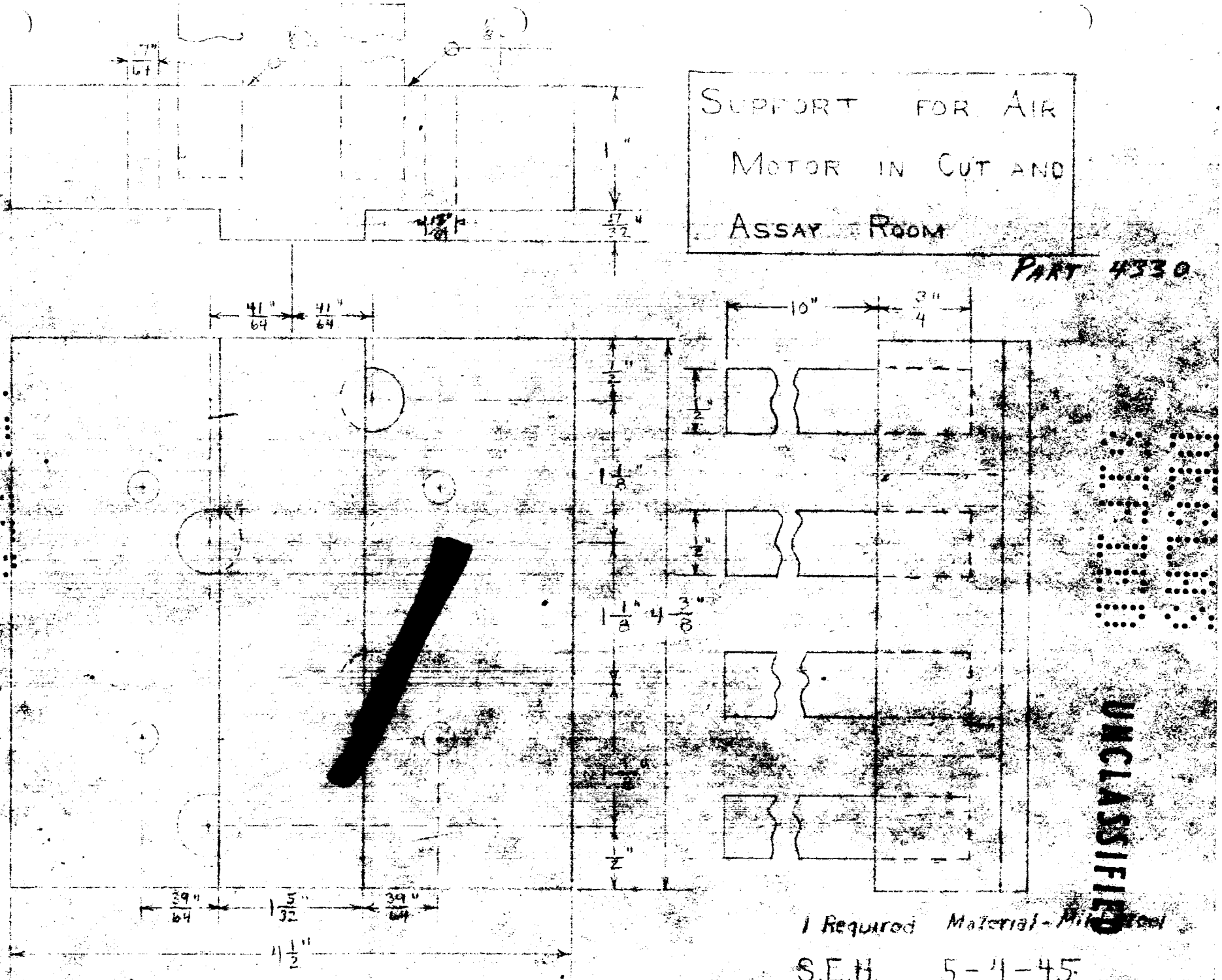

APPROVED FOR PUBLIC RELEASE

APPROVED FOR PUBLIC RELEASE

UNCLASSIFIED

ADAPTER - MOTOR TO STIRRER
PART 4340

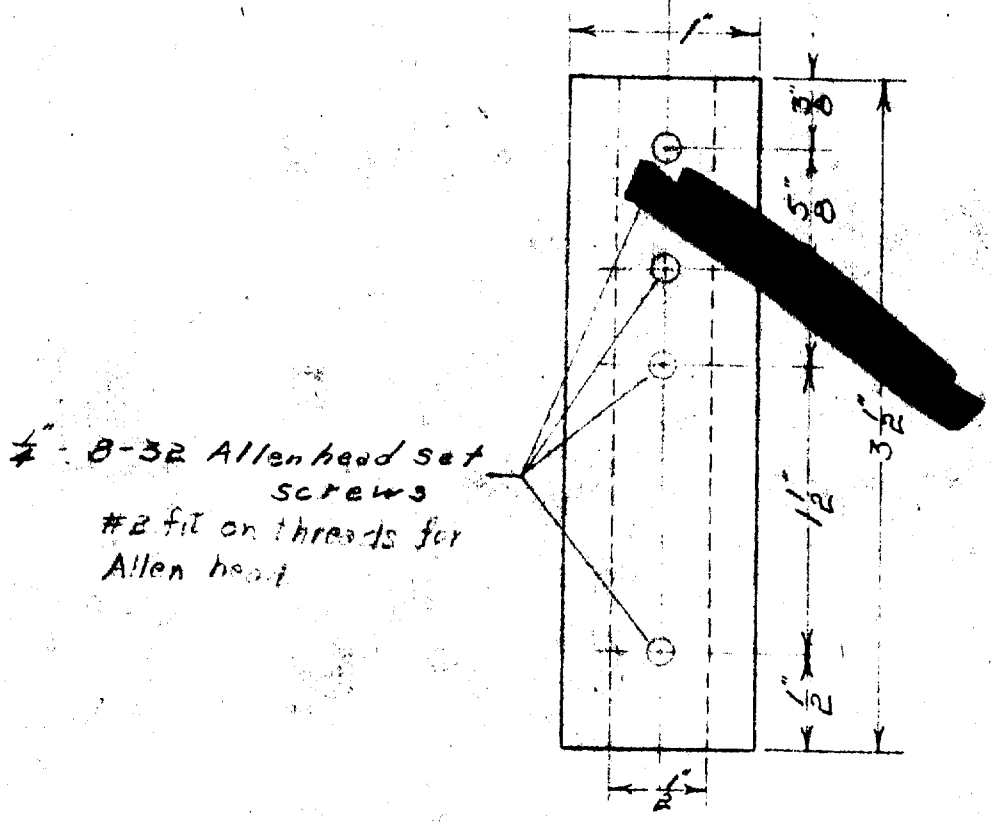

(18-8)
Make from stainless steel.
Grind inside to tolerance of
5.000" ± .003" / -.000"

UNCLASSIFIED

5-June-45

APPROVED FOR PUBLIC RELEASE

APPROVED FOR PUBLIC RELEASE

UNCLASSIFIED

S.N. STIRRER

PART 4350

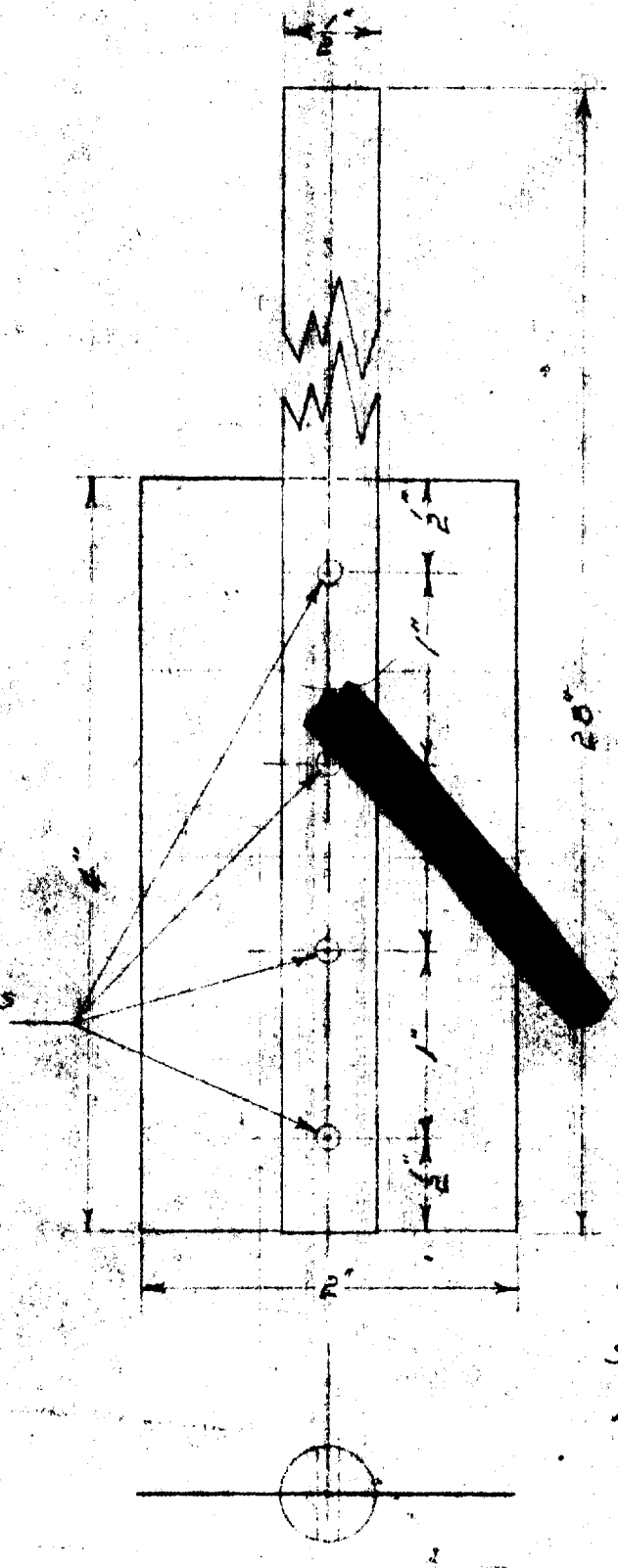

Shaft is 1/2" tantalum rod
Blade is tantalum sheet
mil

UNCLASSIFIED

6 June 45

APPROVED FOR PUBLIC RELEASE

APPROVED FOR PUBLIC RELEASE

UNCLASSIFIED

SN Cut Pipette

PART 4360

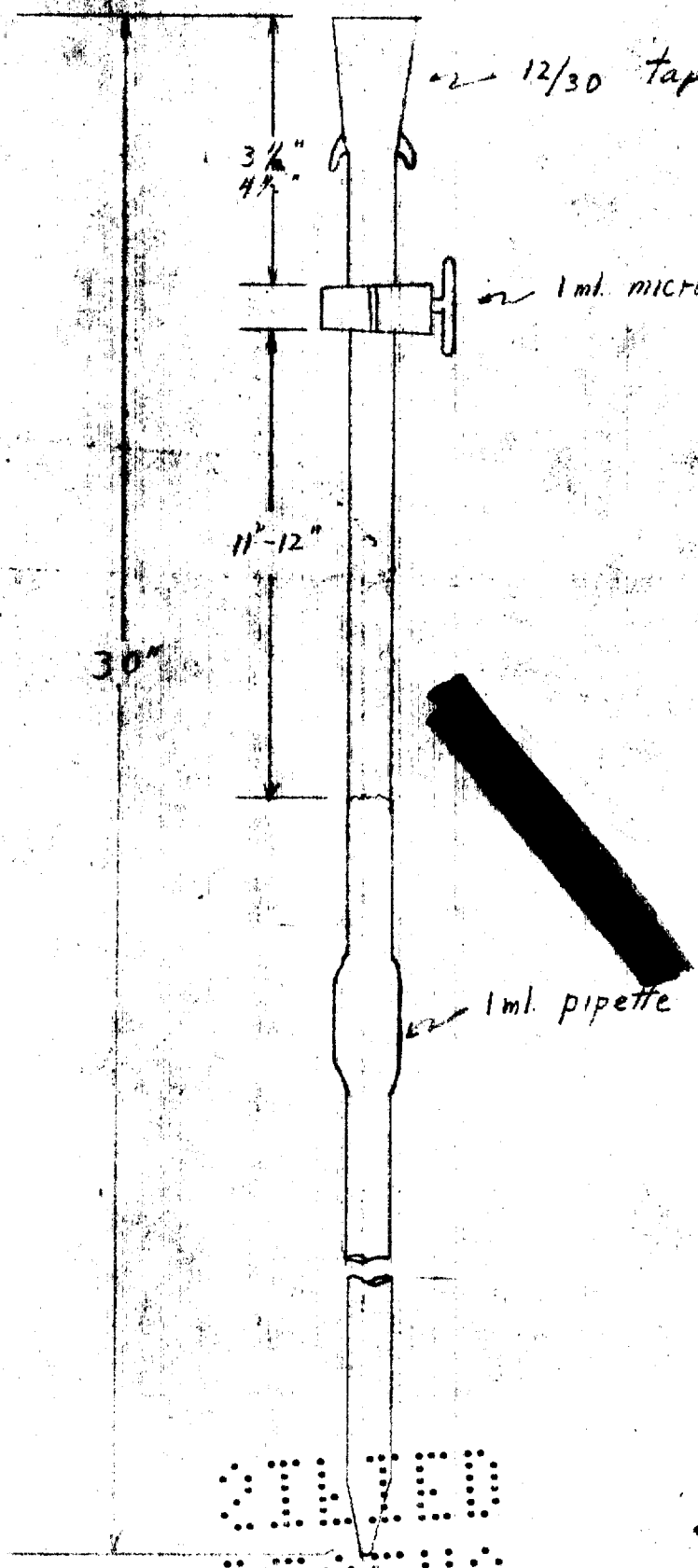

UNCLASSIFIED

APPROVED FOR PUBLIC RELEASE

APPROVED FOR PUBLIC RELEASE

Pipette Holder PART 4370

UNCLASSIFIED

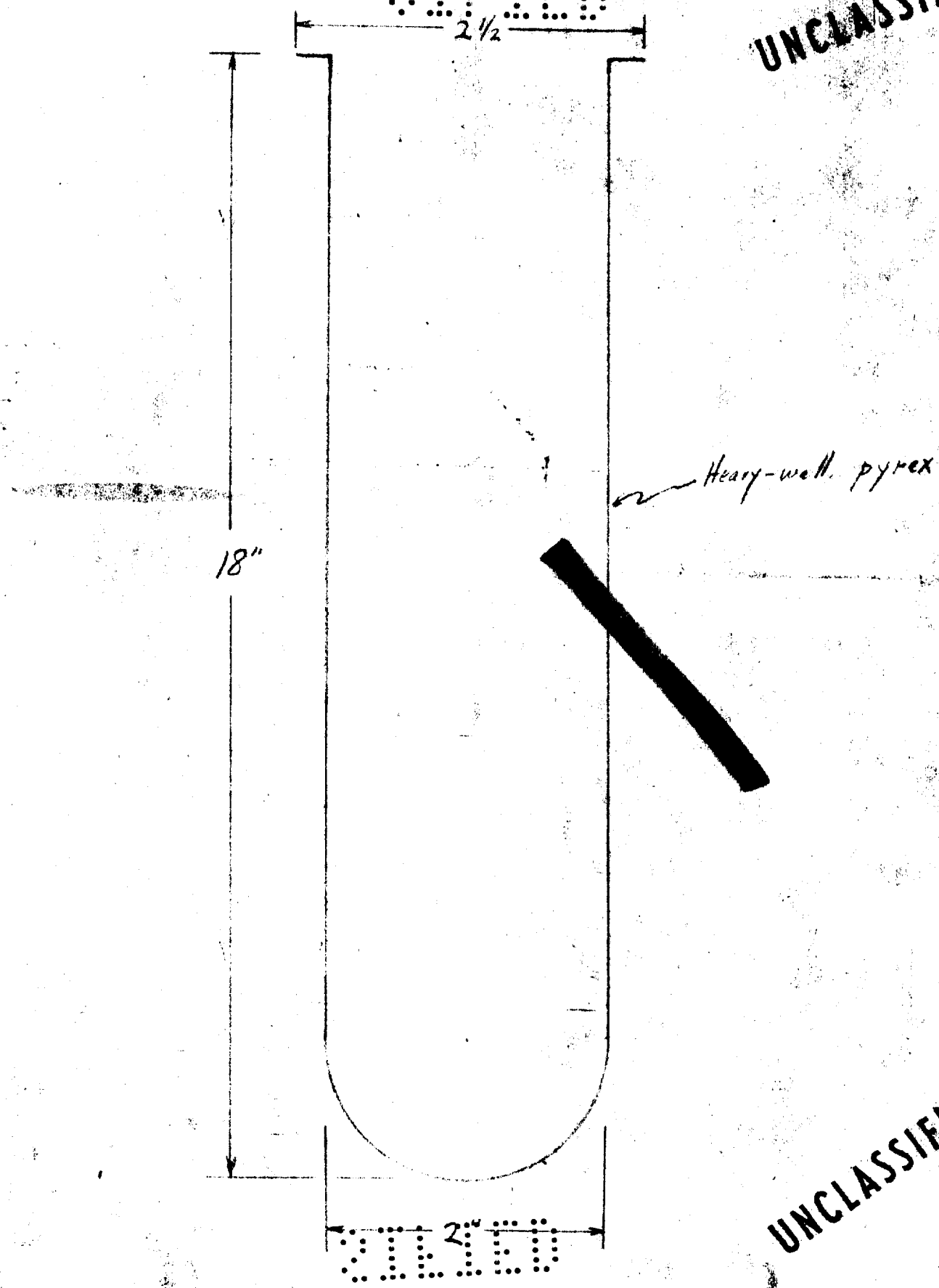

UNCLASSIFIED

APPROVED FOR PUBLIC RELEASE

APPROVED FOR PUBLIC RELEASE

S.N. Cut Room Drip Catchers – Part 4380

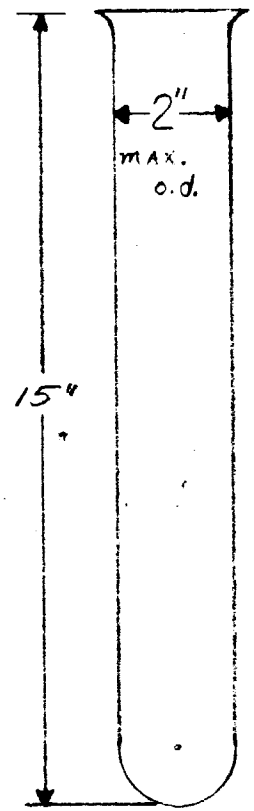

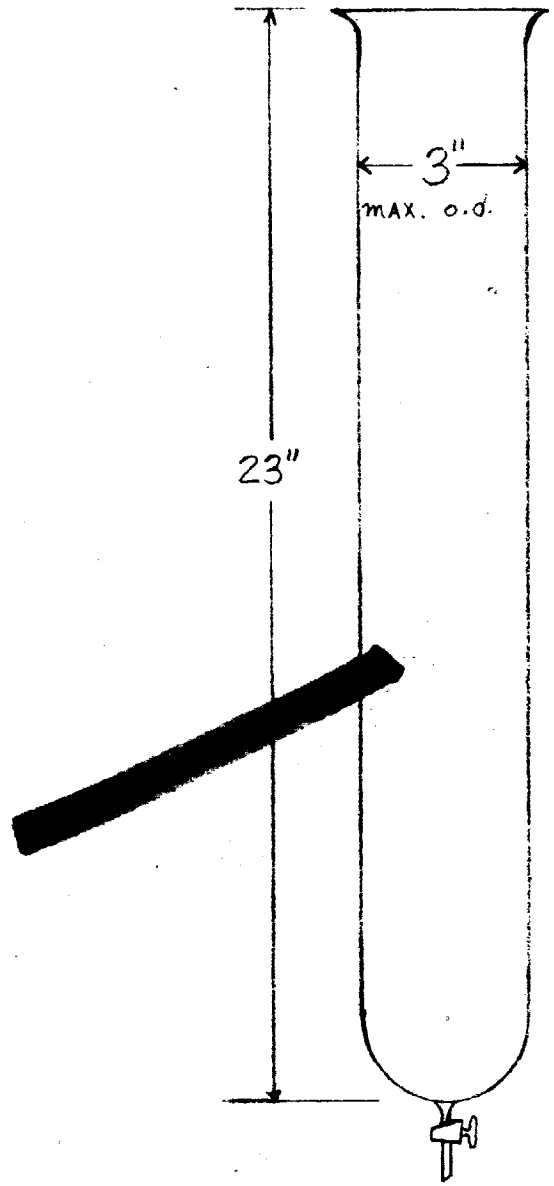

Top flanges, 1/4" wide.
Since tubing is in mm., select nearest <u>undersize</u> piece.

Pyrex glass throughout

P. 131
UNCLASSIFIED
UNCLASSIFIED
APPROVED FOR PUBLIC RELEASE

APPROVED FOR PUBLIC RELEASE

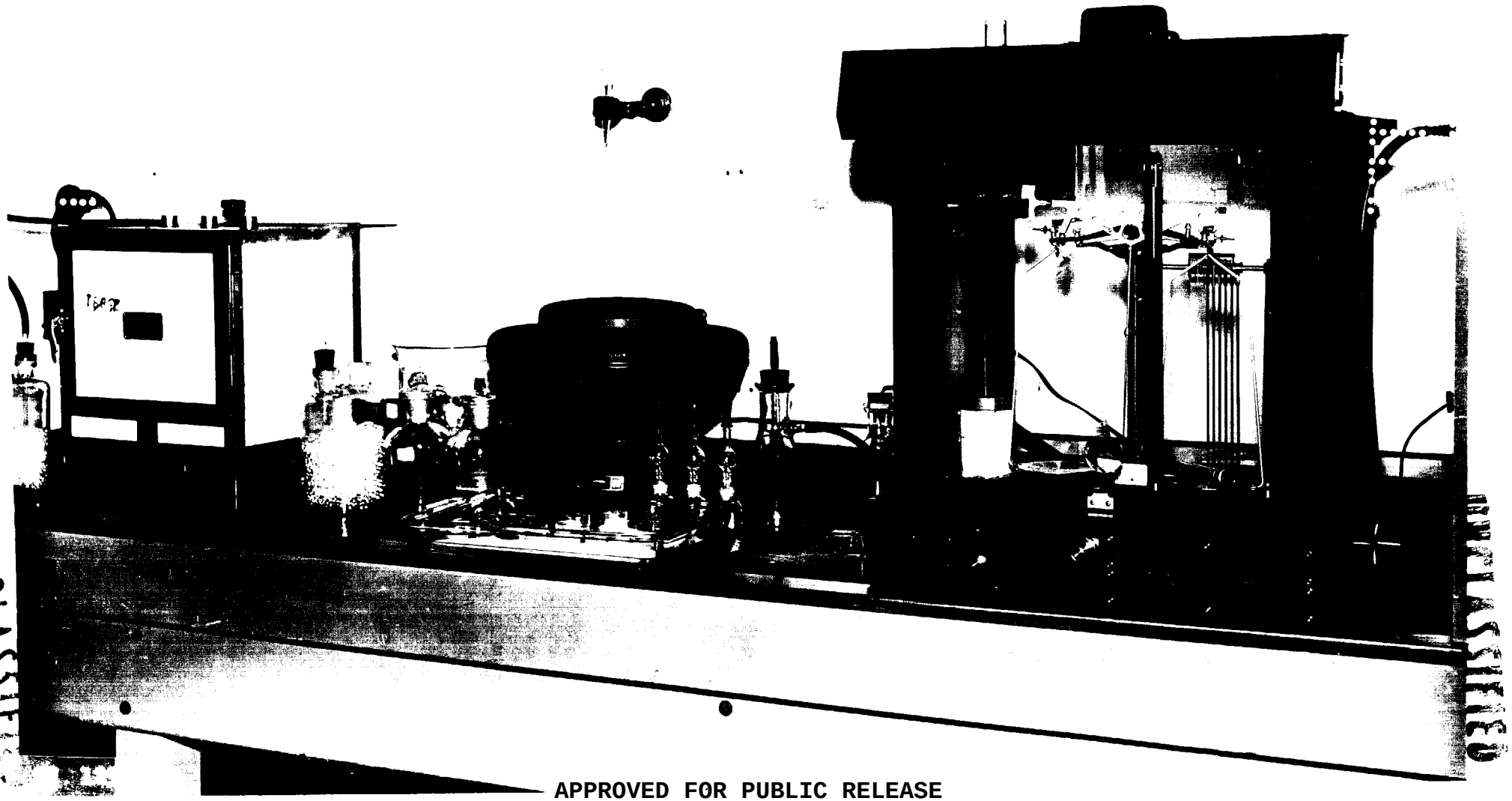

UNCLASSIFIED

APPROVED FOR PUBLIC RELEASE

APPROVED FOR PUBLIC RELEASE

UNCLASSIFIED

UNCLASSIFIED

ROOM LAYOUT * * D - 152

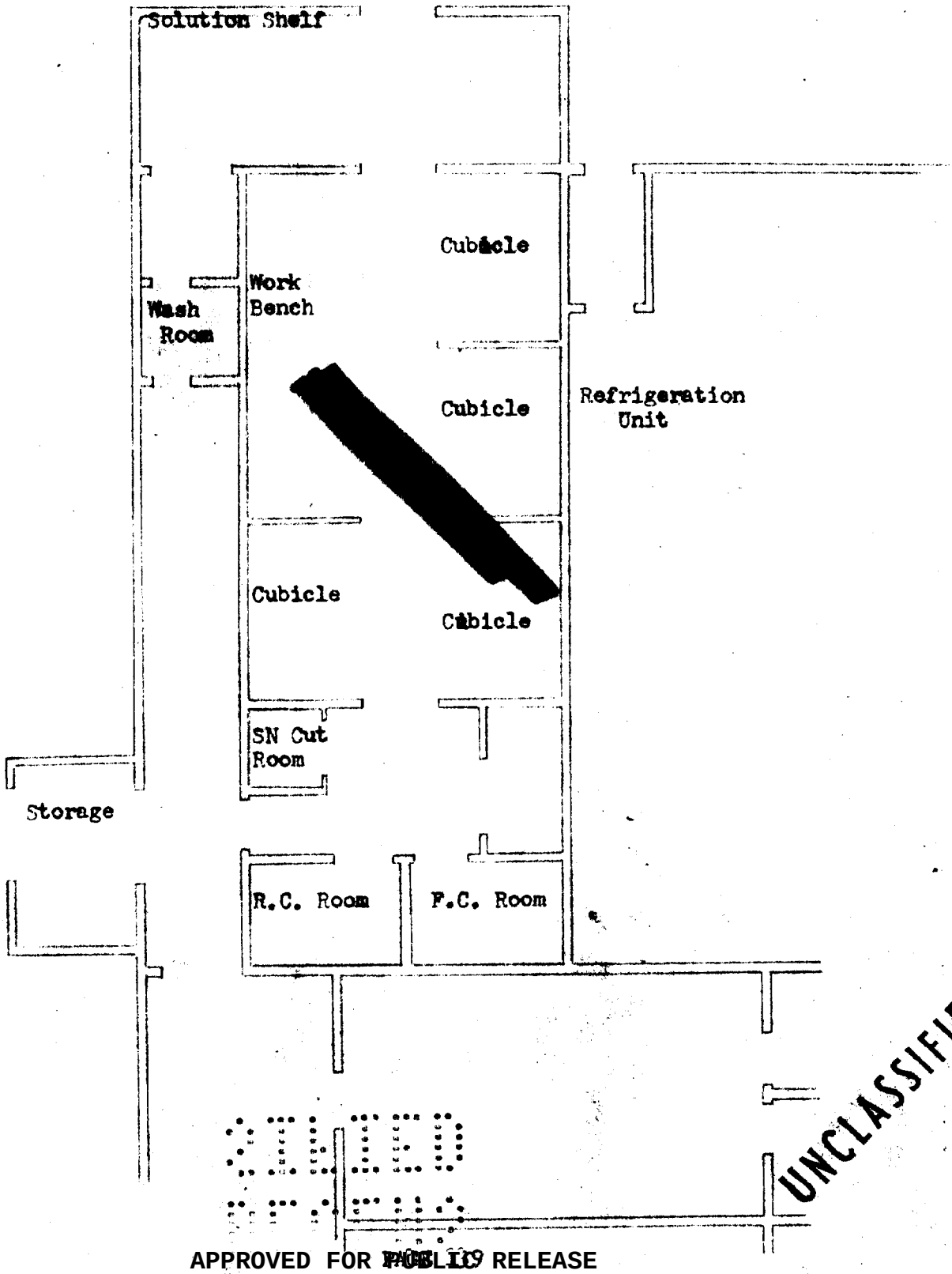

UNCLASSIFIED

APPROVED FOR PUBLIC RELEASE

APPROVED FOR PUBLIC RELEASE

CAN CABINET — 3 REQ'D

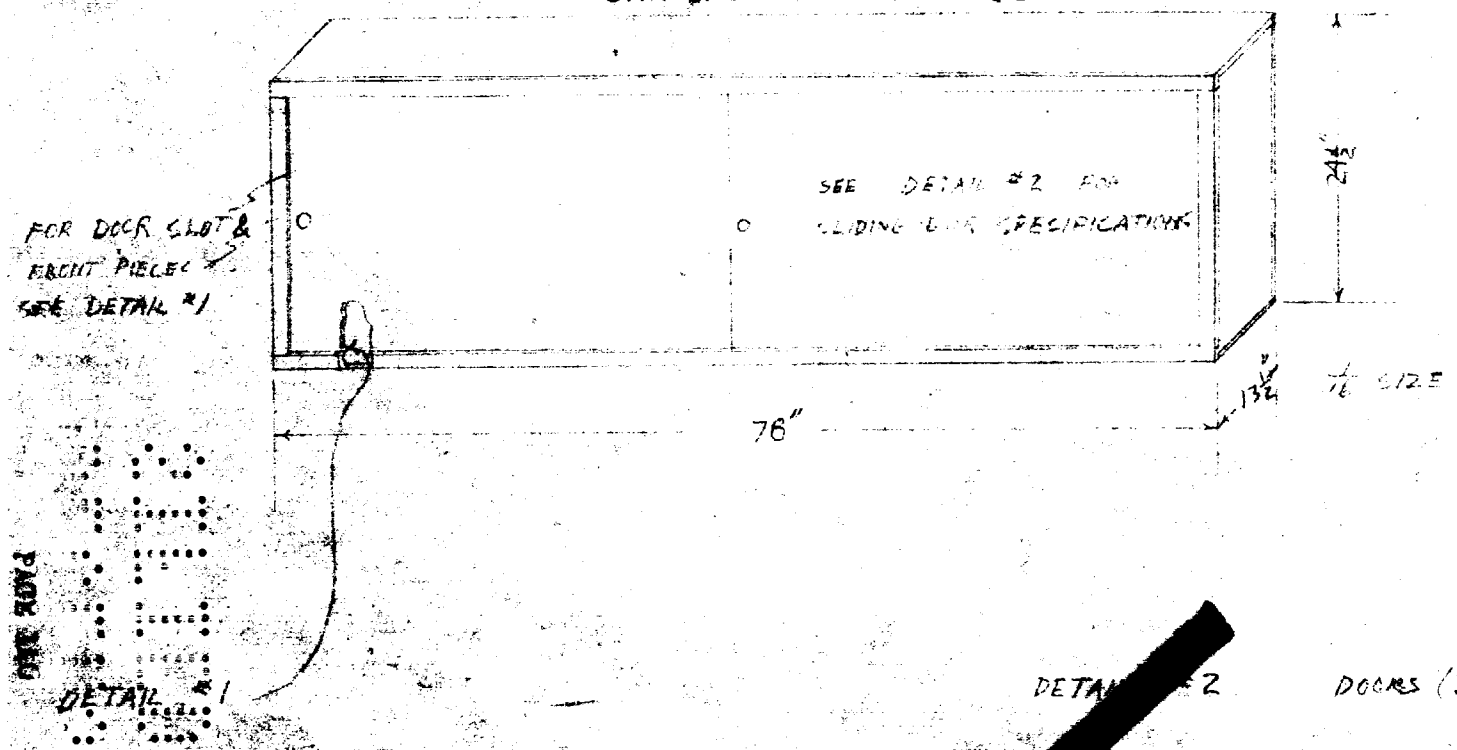

TOP AND SIDES 5/8" PLYWOOD

BACK AND DOORS 1/4" PLYWOOD

DETAIL #1

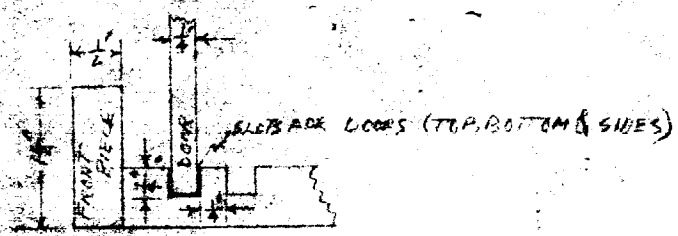

DETAIL #2 DOORS (2 PER EACH UNIT)

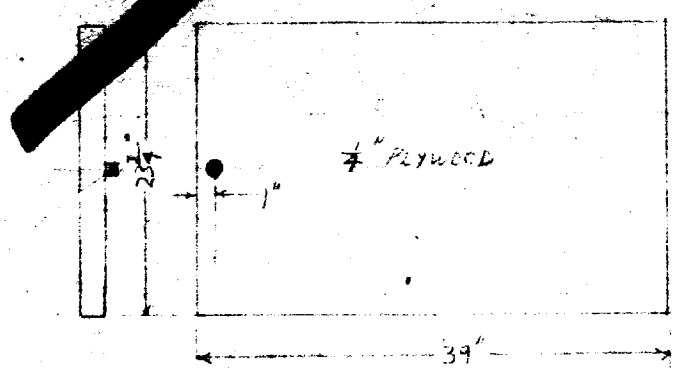

KNOB — BAKELITE CYLINDER
1/2" DIAM, 3/4" LONG; FASTEN
TO DOOR WITH COUNTERSUNK SCREW THRU CENTER OF KNOB.

UNCLASSIFIED

UNCLASSIFIED

APPROVED FOR PUBLIC RELEASE

APPROVED FOR PUBLIC RELEASE

UNCLASSIFIED

UNCLASSIFIED

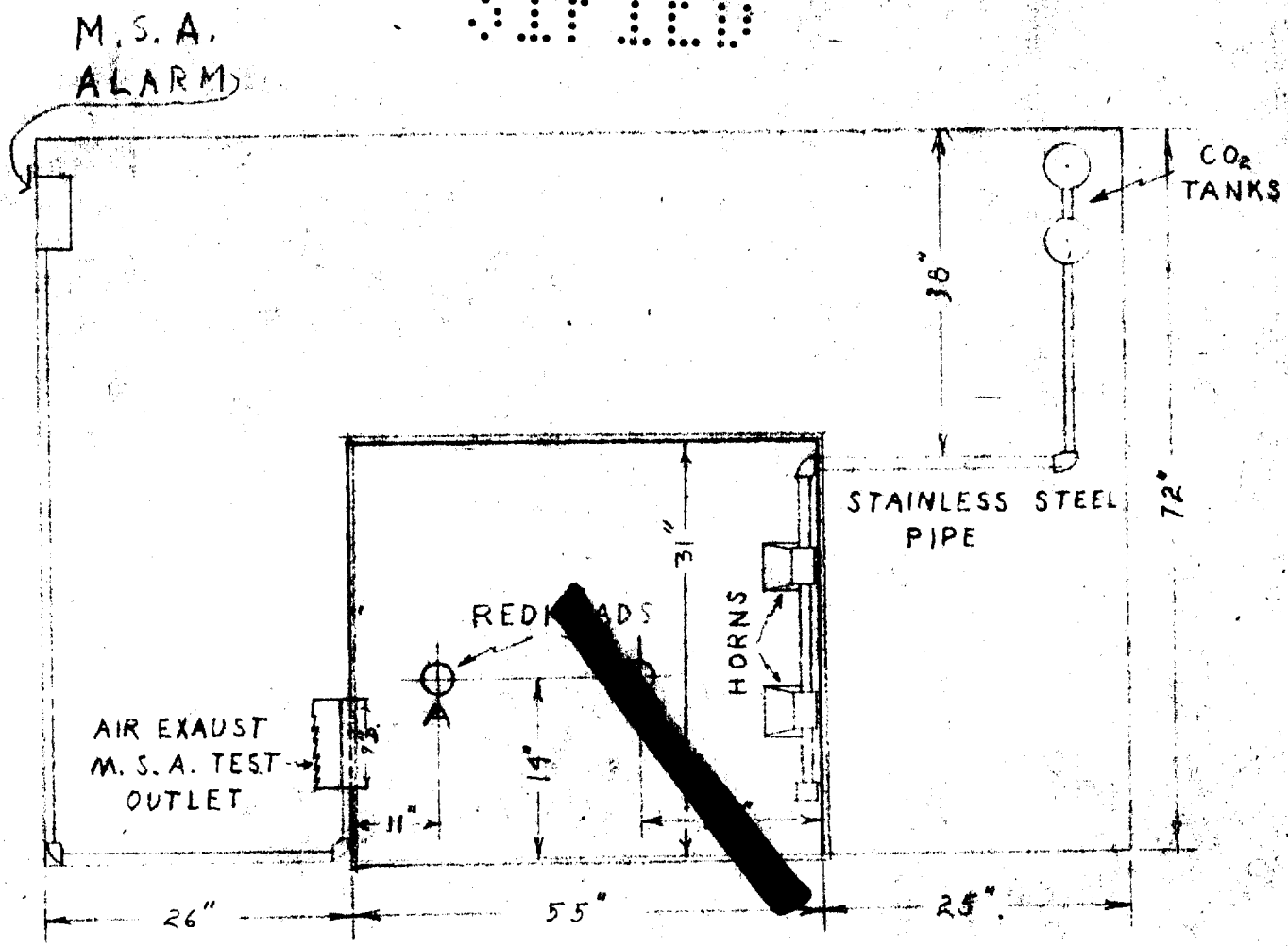

M.S.A.: MINE SAFETY APPARATUS ALARM

REDHEAD: Device that actuates Automatic CO_2 Tanks when the rate of Temperature Rise is rapid

UNCLASSIFIED

APPROVED FOR PUBLIC RELEASE

5/1/46 BEK

APPROVED FOR PUBLIC RELEASE

UNCLASSIFIED

UNCLASSIFIED

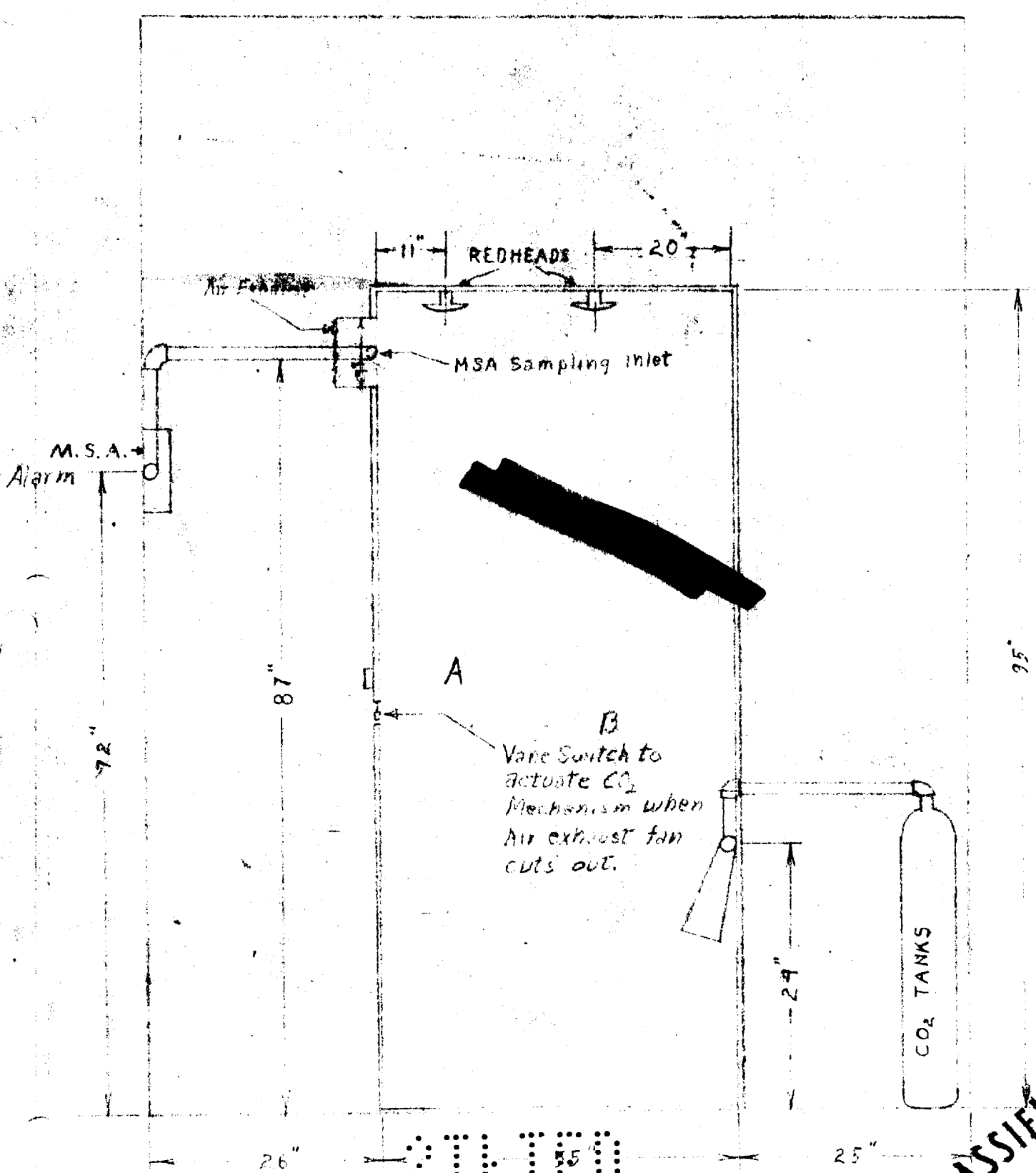

UNCLASSIFIED

APPROVED FOR PUBLIC RELEASE

APPROVED FOR PUBLIC RELEASE

DOLLY HANDLE

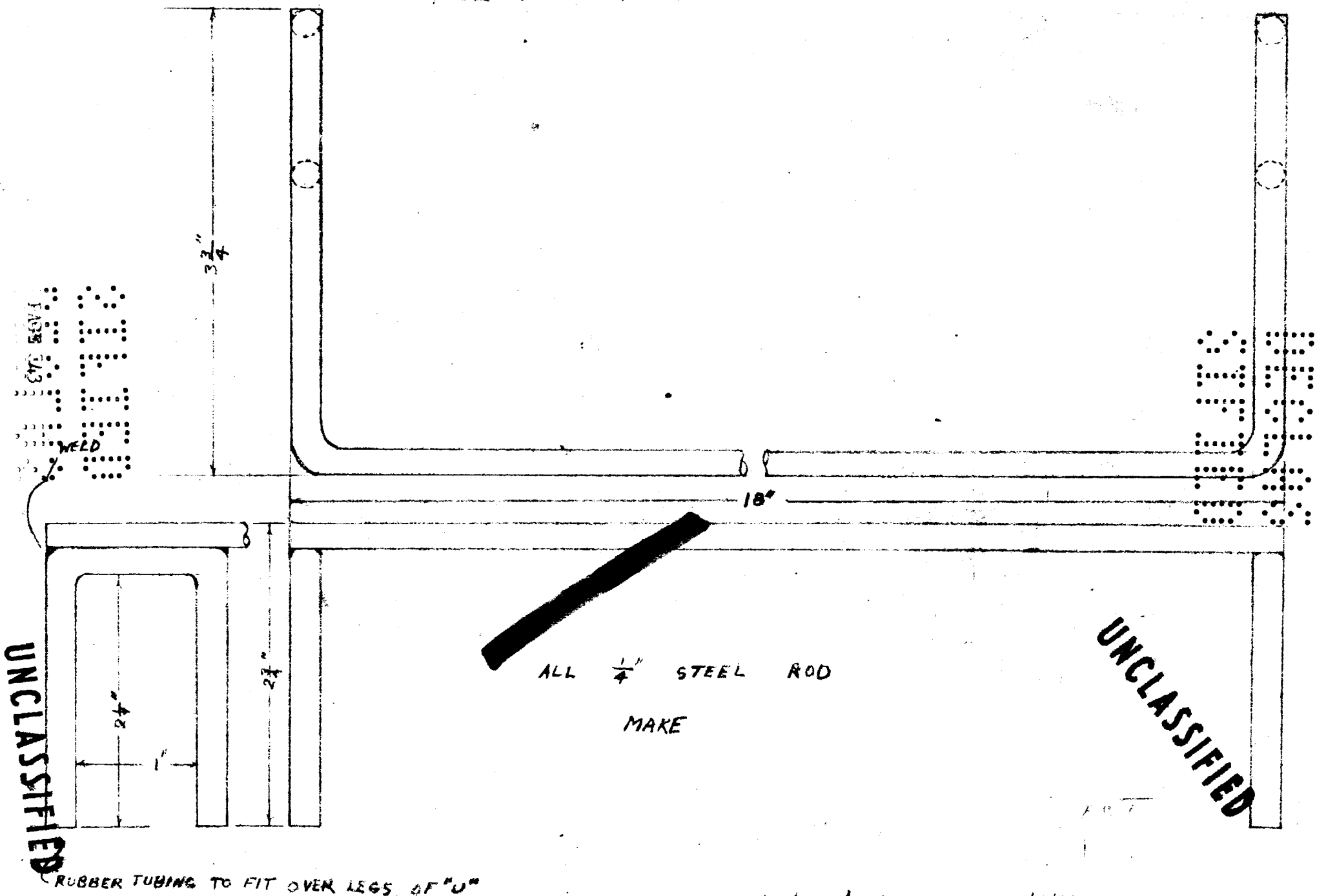

11 JUNE '45

HJM

APPROVED FOR PUBLIC RELEASE

APPROVED FOR PUBLIC RELEASE

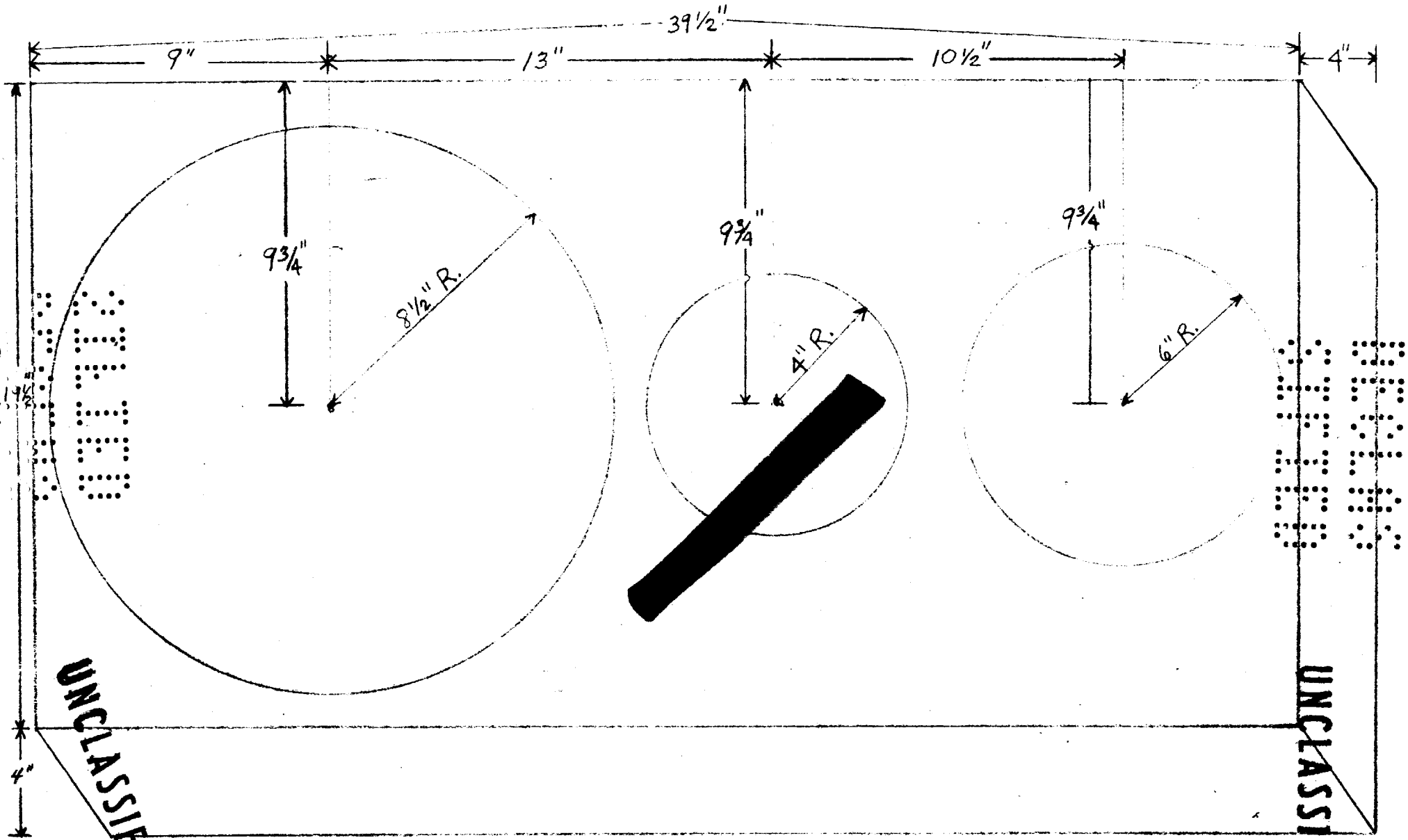

S. N. Cart Frame - Of ½" Plywood
Finish - Shellac and White Enamel

APPROVED FOR PUBLIC RELEASE

APPROVED FOR PUBLIC RELEASE

UNCLASSIFIED

UNCLASSIFIED

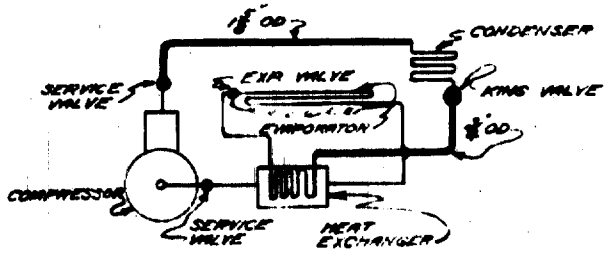

REFRIGERANT CIRCUIT #1

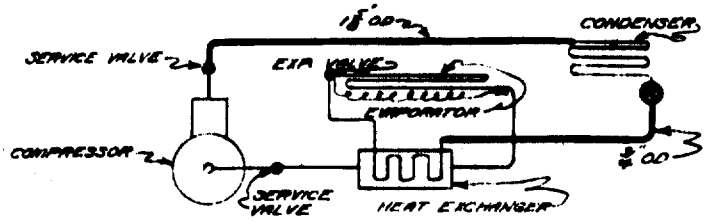

REFRIGERANT CIRCUIT #2

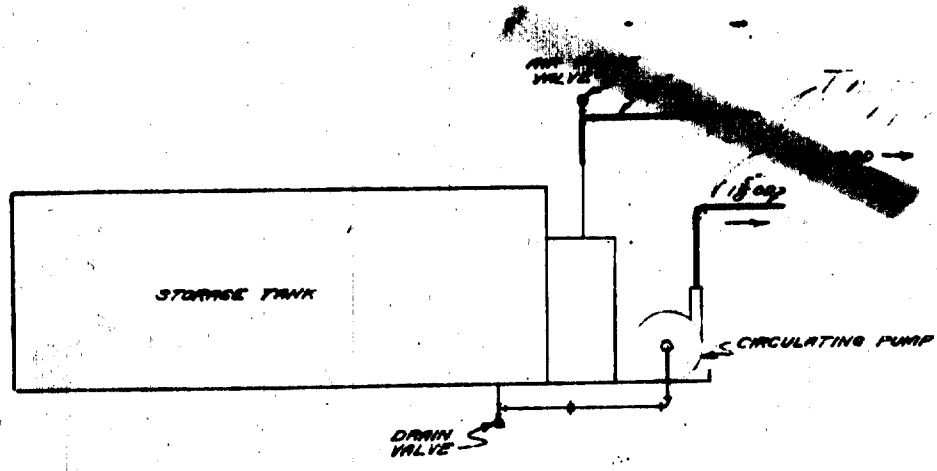

NOTE:
HEAVY LINE WILL BE SHIPPED LOOSE TO BE INSTALLED IN FIELD

C-1005 1458-A

UNIVERSITY OF CALIFORNIA

FIELD ASSEMBLY DRAWING

J.H. 2/13/45 NOTE

UNCLASSIFIED

APPROVED FOR PUBLIC RELEASE

APPROVED FOR PUBLIC RELEASE

UNCLASSIFIED

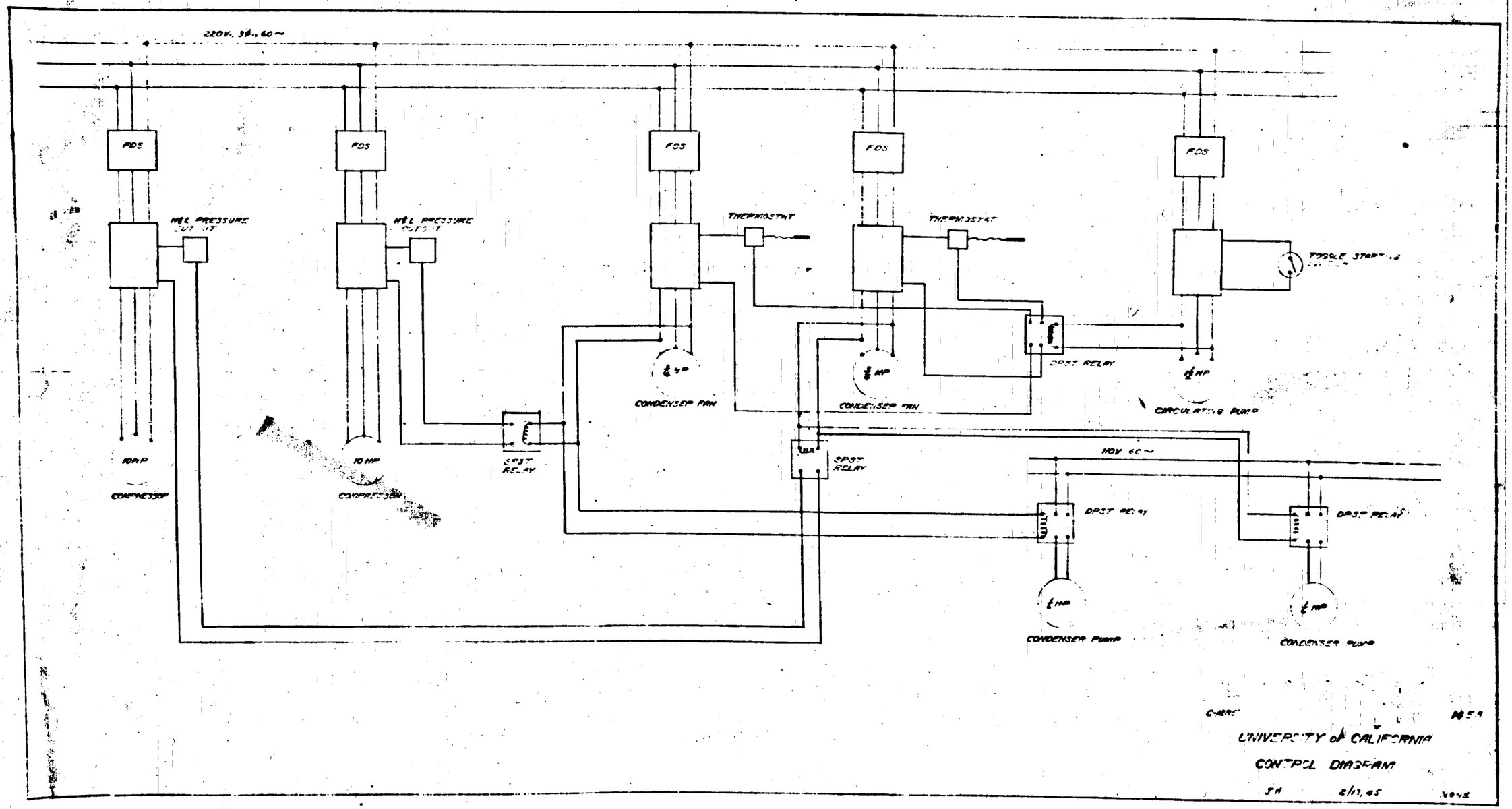

UNCLASSIFIED

APPROVED FOR PUBLIC RELEASE

APPROVED FOR PUBLIC RELEASE

UNCLASSIFIED

Data Sheet on Standard Industrial Equipment Purchased

Air Motors - - -	Binks Agitating Unit 939-A, page 939 in catalogue Binks Manufacturing Corporation
Circulating Pumps - - -	Style 153 B 700; Gould Centrifugal Pump Gould Pumps Incorporated
Combustible Gas Indicator- - -	Type W-5, calibrated for diethyl ether Catalogue DM-7782 Mine Safety Appliance Company
Combustible Gas Alarm - - -	Page 62 in catalogue Mine Safety Appliance Company
CO_2 Fire Extinguishing System -	Kidde Proposal 7975 Walter Kidde & Company
Dial Thermometer - - -	Serial D-34371, Bulletin 148-7 Foxboro Company
Flexible Cable - - -	Shaft, Control, Flexible, #150154 Casing, Flexible, #169A6 S. S. White Dental Manufacturing Company
Intercommunication System - -	Type W - 122 - A Rauland Engineer Corp.
Mercoid Switch - - -	Control, Mercoid, 115/230V., 20 watts maximum Type DA-231-3, 0-30" vacuum Mercoid Corporation
Reducing Valve - - -	No.227, ½" valve, Catalogue 73 Mason-Neilan Regulator Company
Refrigeration Unit - - -	Compressor, Expansion Chamber, Reservoir, Brine, Circulating Pump, Centrifugal Pump from W. S. Kirkpatrick & Co.
Resistance Thermometer - - -	Catalogue 9004, Page 8 Serial No. 229381 Brown Instrument Company
Supernatant Carts - - -	Trucks, Box, Standard Steel; Fig. 870-3 Code LUCRE, Fig. 871 and 975 Nutting Truck and Caster Co.
Vacuum Unit - - -	from Yoeman Brothers Company Chicago, Ill.

UNCLASSIFIED

APPROVED FOR PUBLIC RELEASE